GENERAL NOTES:

1. STORM PANEL SHOWN ON THIS PRODUCT EVALUATION DOCUMENT (P.E.D.) HAS BEEN VERIFIED FOR COMPLIANCE IN ACCORDANCE WITH THE 2010 EDITION OF THE FLORIDA BUILDING CODE. THIS STORM PANEL SHALL **NOT** BE INSTALLED AT HIGH VELOCITY HURRICANE ZONES (MIAMI-DADE / BROWARD COUNTIES).

   DESIGN WIND LOADS SHALL BE DETERMINED AS PER SECTION 1609 OF THE ABOVE MENTIONED CODE, FOR A WIND SPEED AS REQUIRED BY THE JURISDICTION WHERE THESE SHUTTERS WILL BE INSTALLED AND FOR A DIRECTIONALITY FACTOR Kd=0.85. USING ASCE 7-10 FOR INSTALLATIONS UNDER 2010 FBC AND SHALL NOT EXCEED THE MAXIMUM (A.S.D.) DESIGN PRESSURE RATINGS INDICATED ON SHEETS 5, 10 THRU 15.

   IN ORDER TO VERIFY THE ABOVE CONDITION, ULTIMATE DESIGN WIND LOADS DETERMINED PER ASCE 7-10 SHALL BE FIRST REDUCED TO A.S.D. DESIGN WIND LOADS BY MULTIPLYING THEM BY 0.6 IN ORDER TO TO COMPARE THESE W/ MAX. (A.S.D) DESIGN PRESSURE RATINGS INDICATED ON SHEETS 5, 10 THRU 15.

   IN ORDER TO VERIFY THAT COMPONENTS AND ANCHORS ON THIS P.E.D. AS TESTED WERE NOT OVER STRESSED, A 33% INCREASE IN ALLOWABLE STRESS FOR WIND LOADS WAS NOT USED IN THEIR ANALYSIS. A DURATION FACTOR CD=1.60 WAS USED FOR VERIFICATION OF FASTENERS IN WOOD.

   STORM PANEL'S ADEQUACY FOR IMPACT AND FATIGUE RESISTANCE HAS BEEN VERIFIED IN ACCORDANCE WITH SECTION 1609.1.2 OF THE ABOVE MENTIONED CODE AS PER ATL REPORTS # 1128.01-00 AND #0610.02-05, AS PER SSTD 12-99 STANDARD.

2. ALL ALUMINUM SHEET METAL PANELS SHALL HAVE 5052-H32 OR 3004-H34 ALLOY.

3. ALL ALUMINUM EXTRUSIONS SHALL BE ALUMINUM ASSOCIATION 6063-T6 ALLOY & TEMPER UNLESS OTHERWISE NOTED.

4. ALL SCREWS TO BE STAINLESS STEEL 304 OR 316 AISI SERIES OR CORROSION RESISTANT COATED CARBON STEEL AS PER DIN 50018 W/ 50 ksi YIELD STRENGTH AND 90 ksi TENSILE STRENGTH & SHALL COMPLY W/ FLORIDA BUILDING CODE SECTION 2411.3.3.4.

5. BOLTS TO BE ASTM A-307 GALVANIZED STEEL OR AISI 304 SERIES STAINLESS STEEL, WITH 35 ksi MINIMUM YIELD STRENGTH.

6. ANCHORS TO WALL SHALL BE AS FOLLOWS: (UNLESS OTHERWISE NOTED)

   (A) TO EXISTING POURED CONCRETE:
   - 1/4" ø TAPCON ANCHORS AS MANUFACTURED BY I.T.W. BUILDEX.
   - 1/4" ø x 7/8" CALK-IN ANCHORS OR ELCO male & female "PANELMATE" AS MANUFACTURED BY POWER FASTENERS, INC. AND ELCO CONSTRUCTION PRODUCTS, RESPECTIVELY.
   - 1/4" ø x 3/4" ALL POINTS SOLID-SET ANCHORS AS DISTRIBUTED BY ALL POINTS SCREW, BOLT & SPECIALTY COMPANY.

   NOTES:

   A.1) MINIMUM EMBEDMENT INTO POURED CONCRETE OF TAPCON AND ELCO PANELMATE ANCHORS IS 1 3/4";

   A.2) 7/8" CALK-IN ANCHORS SHALL BE ENTIRELY EMBEDDED INTO THE POURED CONCRETE. NO EMBEDMENT INTO STUCCO SHALL BE PERMITTED. 1/4"ø-20 SCREWS USED SHALL BE 1 1/2" LONG MINIMUM SHOULD STUCCO EXIST, AND 1" MINIMUM FOR WALLS WITH NO STUCCO.

   A.3) MINIMUM EMBEDMENT OF 1/4"ø x 3/4" ALL POINTS SOLID-SET ANCHORS SHALL BE 7/8" INTO THE POURED CONCRETE. NO EMBEDMENT INTO STUCCO SHALL BE PERMITTED. 1/4" ø-20 S.S. MACHINE SCREW USED SHALL BE 1 1/2" LONG MINIMUM SHOULD STUCCO EXIST, AND 1" MINIMUM FOR WALLS WITH NO STUCCO.

   A.4) IN CASE THAT PRECAST STONE, PRECAST CONCRETE PANELS, OR PAVERS BE FOUND ON THE EXISTING WALL OR FLOOR, ANCHORS SHALL BE LONG ENOUGH TO REACH THE MAIN STRUCTURE BEHIND SUCH PANELS, ANCHORAGE SHALL BE AS INDICATED ON NOTES A.1) & A.2) ABOVE.

   (B) TO EXISTING CONCRETE BLOCK WALL:
   - 1/4" ø TAPCON ANCHORS AS MANUFACTURED BY I.T.W. BUILDEX.
   - 1/4" ø x 7/8" CALK-IN ANCHORS OR ELCO male & female "PANELMATE" AS MANUFACTURED BY POWER FASTENERS, INC. AND ELCO CONSTRUCTION PRODUCTS, RESPECTIVELY.
   - 1/4" ø x 3/4" ALL POINTS SOLID-SET ANCHORS AS DISTRIBUTED BY ALL POINTS SCREW, BOLT & SPECIALTY COMPANY.

   NOTES:

   B.1) MINIMUM EMBEDMENT OF TAPCON AND ELCO PANELMATE ANCHORS INTO CONCRETE BLOCK UNIT SHALL BE 1 1/4".

   B.2) 7/8" CALK-IN ANCHORS SHALL BE ENTIRELY EMBEDDED INTO THE CONCRETE BLOCK UNIT. NO EMBEDMENT INTO STUCCO SHALL BE PERMITTED. 1/4"ø-20 SCREWS USED SHALL BE 1 1/2" LONG MINIMUM SHOULD STUCCO EXIST, AND 1" MINIMUM FOR WALLS WITH NO STUCCO.

   B.3) MINIMUM EMBEDMENT OF 1/4"ø x 3/4" ALL POINTS SOLID-SET ANCHORS SHALL BE 7/8" INTO THE CONCRETE BLOCK. NO EMBEDMENT INTO STUCCO SHALL BE PERMITTED. 1/4" ø-20 S.S. MACHINE SCREW USED SHALL BE 1 1/2" LONG MINIMUM SHOULD STUCCO EXIST, AND 1" MINIMUM FOR WALLS WITH NO STUCCO.

   B.4) IN CASE THAT PRECAST STONE OR PRECAST CONCRETE PANELS BE FOUND ON THE EXISTING WALL, ANCHORS SHALL BE LONG ENOUGH TO REACH THE MAIN STRUCTURE BEHIND SUCH PANELS. ANCHORAGE SHALL BE AS INDICATED ON NOTES IN B.1) AND B.2) ABOVE.

   (C) ANCHORS SHALL BE INSTALLED FOLLOWING ALL OF THE RECOMMENDATIONS AND SPECIFICATIONS OF THE ANCHOR'S MANUFACTURER.

7. PANELS MAY ALSO BE INSTALLED HORIZONTALLY FOLLOWING INSTALLATION DETAILS SHOWN ON SECTIONS 1 THRU 9 (SHEET 3 & 5 OF 15) EXCEPT THAT HEADERS 2, 3 & 4 SHALL NOT BE USED.

8. IT SHALL BE THE RESPONSIBILITY OF THE CONTRACTOR TO VERIFY THE SOUNDNESS OF THE STRUCTURE WHERE SHUTTER IS TO BE ATTACHED TO INSURE PROPER ANCHORAGE. THIS SHUTTER SHALL ONLY BE ATTACHED TO CONCRETE, BLOCK OR WOOD FRAME BUILDINGS.

9. THE INSTALLATION CONTRACTOR IS TO SEAL/CAULK ALL SHUTTER COMPONENT EDGES WHICH REMAIN IN CONTINUOUS CONTACT WITH THE BUILDING TO PREVENT WIND/RAIN INTRUSION. CAULK AND SEAL SHUTTER TRACKS ALL AROUND FULL LENGTH.

10. (a) THIS P.E.D. PREPARED BY THIS ENGINEER IS GENERIC AND DOES NOT PROVIDE INFORMATION FOR A SITE SPECIFIC PROJECT; i.e. WHERE THE SITE CONDITIONS DEVIATE FROM THE P.E.D.

    (b) CONTRACTOR TO BE RESPONSIBLE FOR THE SELECTION, PURCHASE AND INSTALLATION INCLUDING LIFE SAFETY OF THIS PRODUCT, BASED ON THIS P.E.D. PROVIDED HE/SHE DOES NOT DEVIATE FROM THE CONDITIONS DETAILED ON THIS DOCUMENT. CONSTRUCTION SAFETY AT SITE IS THE CONTRACTOR'S RESPONSIBILITY.

    (c) THIS P.E.D. WILL BE CONSIDERED INVALID IF ALTERED BY ANY MEANS.

    (d) SITE SPECIFIC PROJECTS SHALL BE PREPARED BY A FLORIDA REGISTERED ENGINEER OR ARCHITECT WHICH WILL BECOME THE ENGINEER OF RECORD (E.O.R.) FOR THE PROJECT AND WHO WILL BE RESPONSIBLE FOR THE PROPER USE OF THE P.E.D. ENGINEER OF RECORD, ACTING AS A DELEGATED ENGINEER TO THE P.E.D. ENGINEER, SHALL SUBMIT TO THIS LATTER THE SITE SPECIFIC DRAWINGS FOR REVIEW.

    (e) THIS P.E.D. SHALL BEAR THE DATE AND ORIGINAL SEAL AND SIGNATURE OF THE PROFESSIONAL ENGINEER OF RECORD THAT PREPARED IT.

11. SHUTTER MANUFACTURER'S LABEL SHALL BE LOCATED ON A READILY VISIBLE LOCATION AT STORM PANEL IN ACCORDANCE WITH SECTION 1715.8.3 OF FLORIDA BUILDING CODE. ONE LABEL SHALL BE PLACED FOR EVERY OPENING. LABELING TO COMPLY WITH SECTION 1715.8.2 OF THE FLORIDA BUILDING CODE

WALTER A. TILLIT JR. LICENSE No. 44167 STATE OF FLORIDA PROFESSIONAL ENGINEER

FLORIDA BUILDING CODE (Non High Velocity Hurricane Zone)

©2011 TILTECO, INC.

TILTECO INC.
TILLIT TESTING & ENGINEERING COMPANY
6355 N.W. 36th. St. Ste. 305, VIRGINIA GARDENS, FL 33166
Phone : (305)871-1530 , Fax : (305)871-1531
EB-0006719
WALTER A. TILLIT Jr. P.E.
FLORIDA Lic. # 44167

0.040" BERTHA ALUMINUM STORM PANEL (2.25" DEEP)

EASTERN METAL SUPPLY, INC
4268 WEST ROADS DRIVE
WEST PALM BEACH, FL. 33407
PHONE: (561)209-8263, FAX: (561)841-1716

REV. No	DESCRIPTION	DATE	REV. No	DESCRIPTION	DATE
1	OLD 08-145	12/06/11	3		
2			4		

L.G./R.E./A.G.
DRAWN BY:

12/06/11
DATE:

11-224
DRAWING No

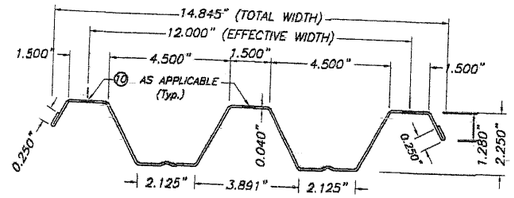

FULL PANEL W/ HEMMED EDGES

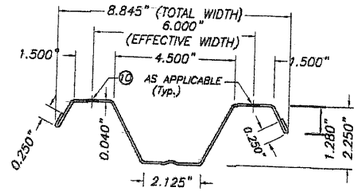

HALF PANEL W/ HEMMED EDGES

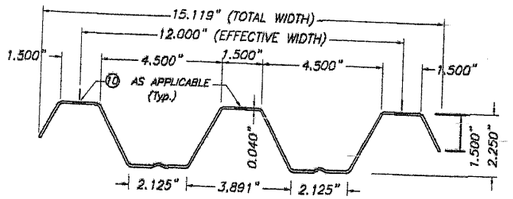

OPTIONAL FULL PANEL W/O HEMMED EDGES

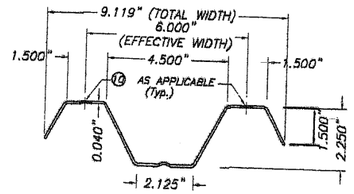

OPTIONAL HALF PANEL W/O HEMMED EDGES

1 STORM PANEL

SCALE : 3/16" = 1"

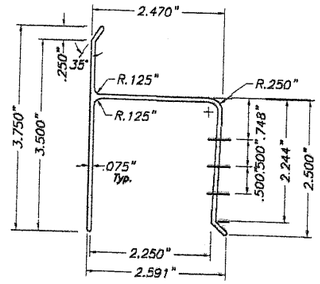

2 "h" HEADER

SCALE : 3/8" = 1"

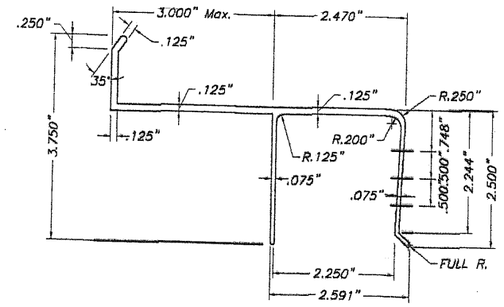

3 3" Max. "U" BUILD OUT

SCALE : 3/8" = 1"

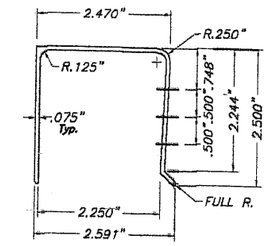

4 "U" HEADER

SCALE : 3/8" = 1"

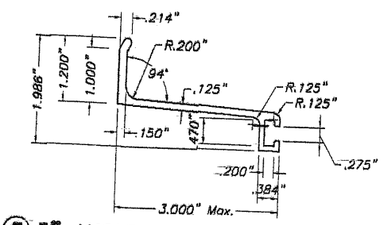

5 3" ANGLE BUILD OUT BRACKET

SCALE : 3/8" = 1"

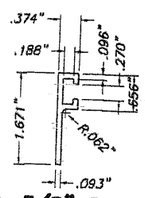

6 3/8" B. O. "F" TRACK

SCALE : 3/8" = 1"

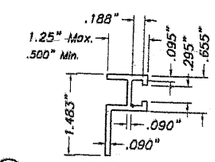

6A 1 1/4" MAX. B. O. "F" TRACK

SCALE : 3/8" = 1"

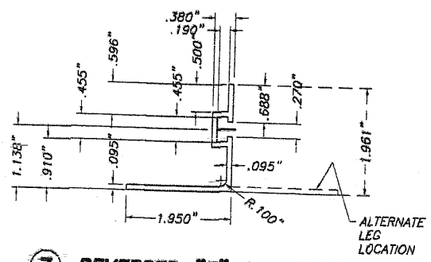

7 REVERSED "F" ANGLE TRACK

SCALE : 3/8" = 1"

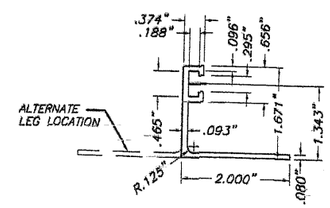

8 "F" TRACK ANGLE

SCALE : 3/8" = 1"

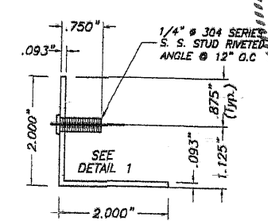

9 2"x2" STUDDED ANGLE

SCALE : 3/8" = 1"

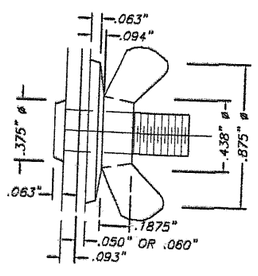

DETAIL 1: STUD W/ DIE CAST ZINC NICKEL PLATED WING NUT

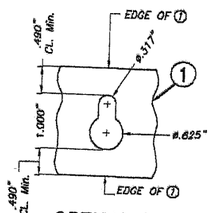

OPTION 1

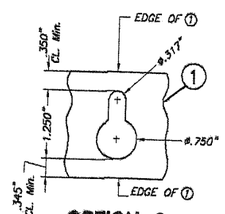

OPTION 2

10 KEY HOLE AT PANEL

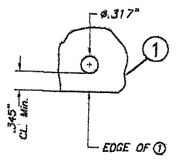

10A ROUND HOLE AT PANEL (OPTION TO 10)

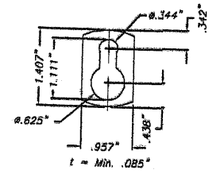

11 KEY HOLE WASHER

3105-H154 Alum. ALLOY

SCALE : 3/8" = 1"

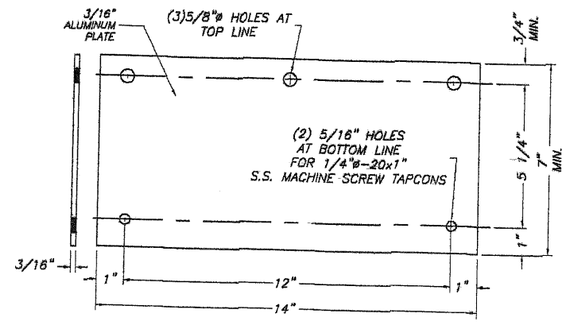

16 3/16"x7"x14" LONG WALL PLATE

SCALE: 3/16" = 1"

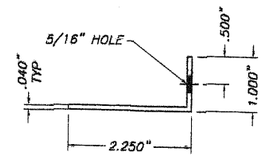

17 2 1/4"x1"x.040" FLASHING ANGLE

SCALE: 3/16" = 1"

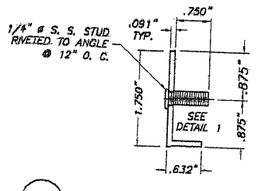

12 MINI WALL 1.75"x0.632" ANGLE WITH STUD

SCALE: 1/2" = 1"

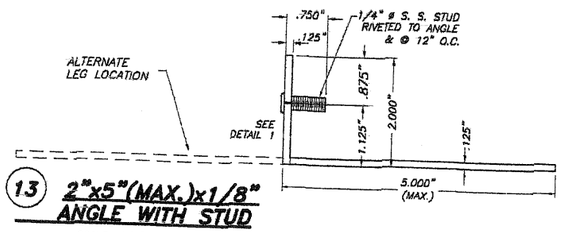

13 2"x5"(MAX.)x1/8" ANGLE WITH STUD

SCALE: 3/8" = 1"

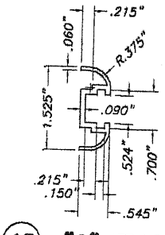

15 "C" TRACK

SCALE : 3/8" = 1"

WALTER A. TILLIT JR. LICENSE No. 44167 STATE OF FLORIDA PROFESSIONAL ENGINEER

COMPONENTS

FLORIDA BUILDING CODE (Non High Velocity Hurricane Zone)

©2011 TILTECO, INC.

TILTECO INC.
TILLIT TESTING & ENGINEERING COMPANY
6355 N.W. 36th. St., Ste. 305, VIRGINIA GARDENS, FL 33166
Phone : (305)871-1530 . Fax : (305)871-1531
EB-0006719
WALTER A. TILLIT Jr. P.E.
FLORIDA Lic. # 44167

0.040" BERTHA ALUMINUM STORM PANEL (2.25" DEEP)

EASTERN METAL SUPPLY, INC
4268 WEST ROADS DRIVE
WEST PALM BEACH, FL. 33407
PHONE: (561)209-8263, FAX: (561)841-1716

REV. No	DESCRIPTION	DATE	REV. No	DESCRIPTION	DATE
1	OLD 08-145	12/06/11	3		
2	PANEL LIP	3/21/07	4		

L.G./R.E./A.G.
DRAWN BY:

12/06/11
DATE:

11-224
DRAWING No

SHEET 1A OF 15

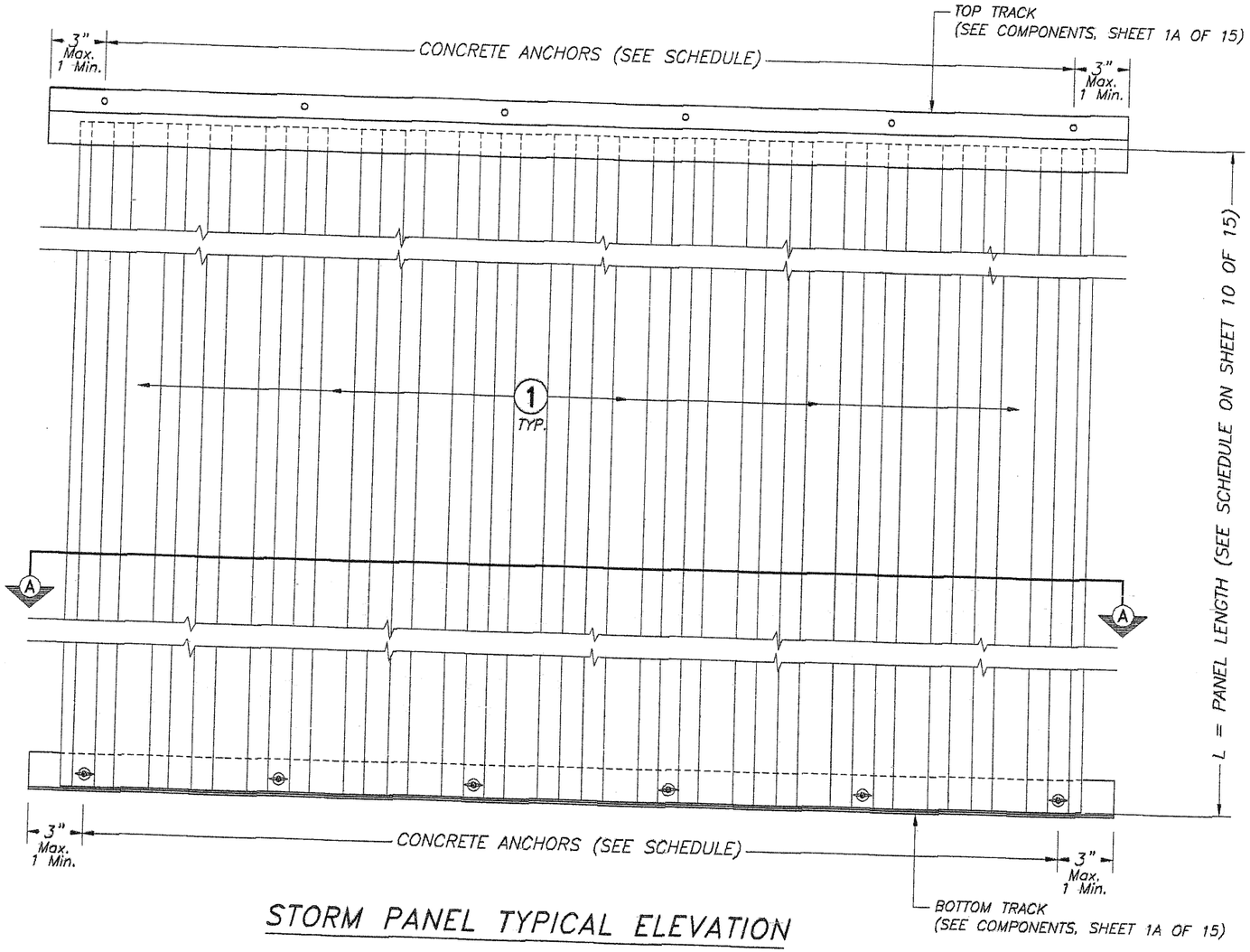

STORM PANEL TYPICAL ELEVATION

SCALE : 1/8" = 1"

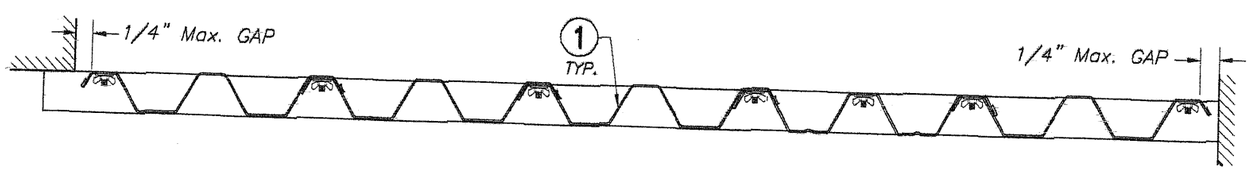

SECTION A–A

SCALE : 1/8" = 1"

WALTER A. TILLIT JR.
LICENSE
No. 44167
STATE OF FLORIDA
PROFESSIONAL ENGINEER

FLORIDA BUILDING CODE (Non High Velocity Hurricane Zone)

©2011 TILTECO, INC.

TILTECO INC.
TILLIT TESTING & ENGINEERING COMPANY
6355 N.W. 36th. St., Ste. 305. VIRGINIA GARDENS, FL. 33166
Phone : (305)871-1530 . Fax : (305)871-1531
EB-0006719
WALTER A. TILLIT Jr. P.E.
FLORIDA Lic. # 44167

0.040" BERTHA ALUMINUM STORM PANEL (2.25" DEEP)

EASTERN METAL SUPPLY, INC
4268 WEST ROADS DRIVE
WEST PALM BEACH, FL. 33407
PHONE: (561)209-8263, FAX: (561)841-1716

REV. No	DESCRIPTION	DATE	REV. No	DESCRIPTION	DATE
1	OLD 08-145	12/06/11	3		
2			4		

L.G./R.E./A.G.
DRAWN BY:

12/06/11
DATE:

11-224
DRAWING No

SHEET 2 OF 15

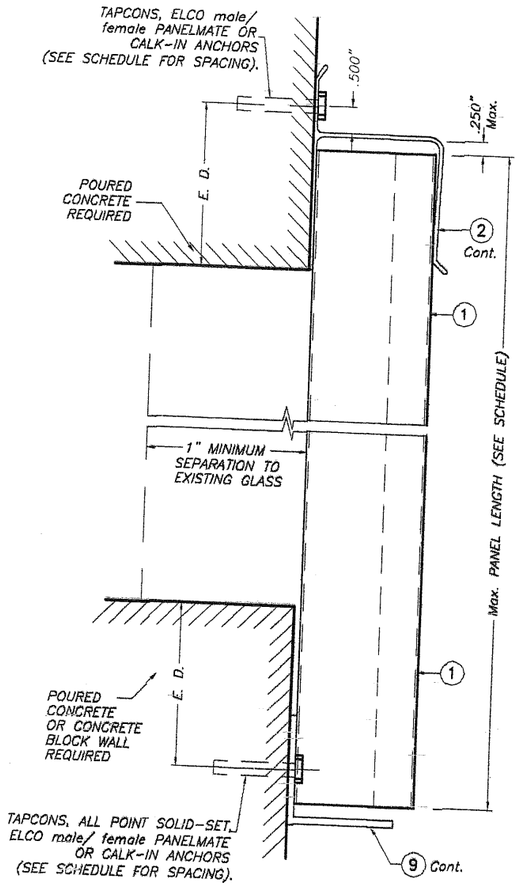

SECTION @ ANCHOR

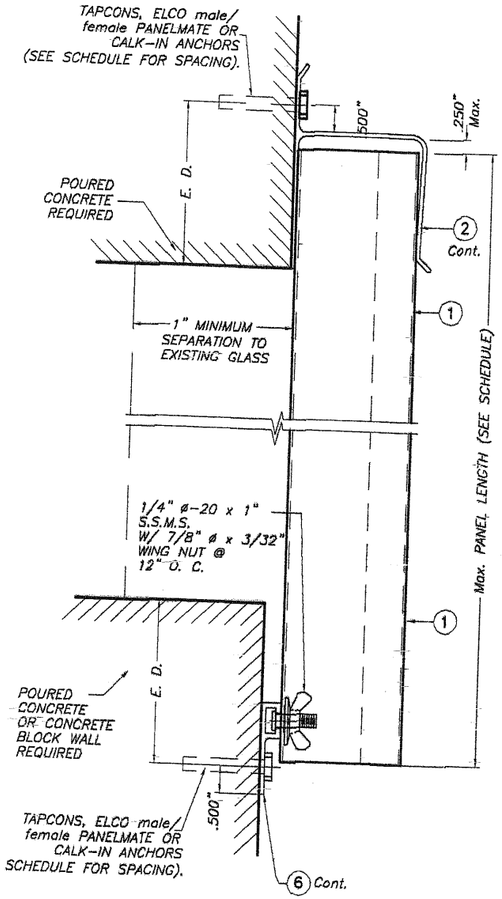

WALL MOUNTING INSTALLATION SECTION 2

SCALE : 3/8" = 1"

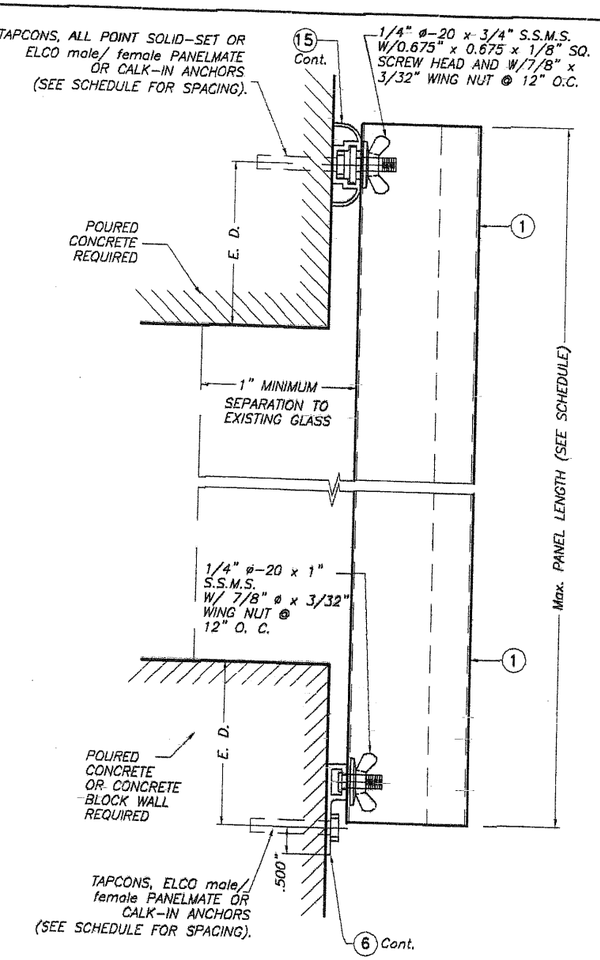

WALL MOUNTING INSTALLATION SECTION 3

SCALE : 3/8" = 1"

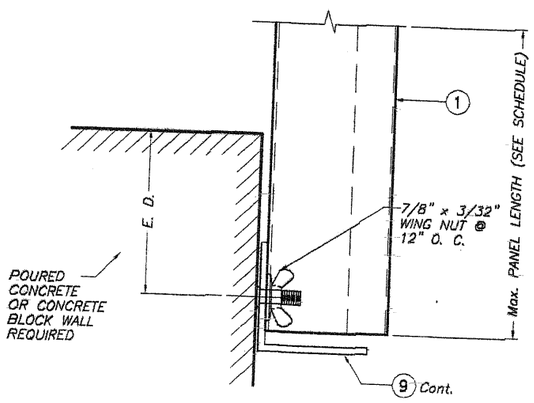

SECTION @ STUD

WALL MOUNTING INSTALLATION SECTION 1

SCALE : 3/8" = 1"

E. D. = EDGE DISTANCE (SEE SCHEDULE ON SHEETS 10 OF 15)

NOTE FOR COMBINATION OF SECTIONS :

WALL/FLOOR/CEILING MOUNTING SECTIONS CAN BE COMBINED IN ANY WAY TO SUIT ANY INSTALLATION.

WALTER A. TILLIT JR. LICENSE No. 44167 STATE OF FLORIDA PROFESSIONAL ENGINEER

FLORIDA BUILDING CODE (Non High Velocity Hurricane Zone)

©2011 TILTECO, INC.

TILTECO INC.
TILLIT TESTING & ENGINEERING COMPANY
6355 N.W. 36th. St. Ste. 305, VIRGINIA GARDENS, FL 33166
Phone : (305)871-1530 , Fax : (305)871-1531
EB-0006719
WALTER A. TILLIT Jr. P.E.
FLORIDA Lic. # 44167

0.040" BERTHA ALUMINUM STORM PANEL (2.25" DEEP)

EASTERN METAL SUPPLY, INC
4268 WEST ROADS DRIVE
WEST PALM BEACH, FL. 33407
PHONE: (561)209-8263, FAX: (561)841-1716

REV. No	DESCRIPTION	DATE	REV. No	DESCRIPTION	DATE
1	OLD 08-145	12/08/11	3		
2			4		

L.G./R.E./A.G. DRAWN BY:
12/06/11 DATE:
11-224 DRAWING No
SHEET 3 OF 15

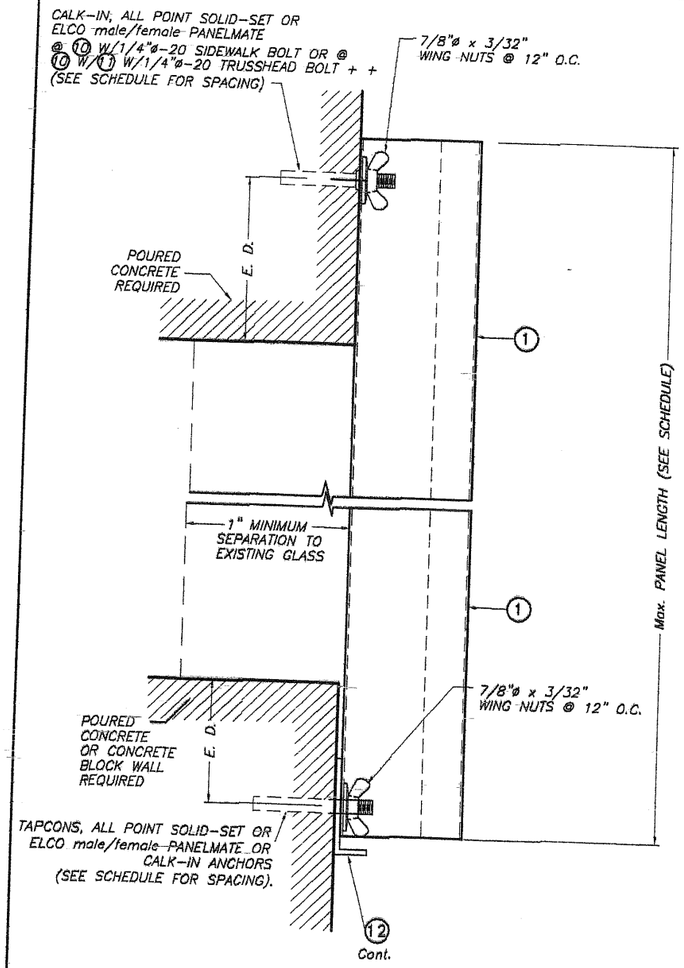

WALL MOUNTING INSTALLATION
SECTION 4

SCALE : 3/8" = 1"

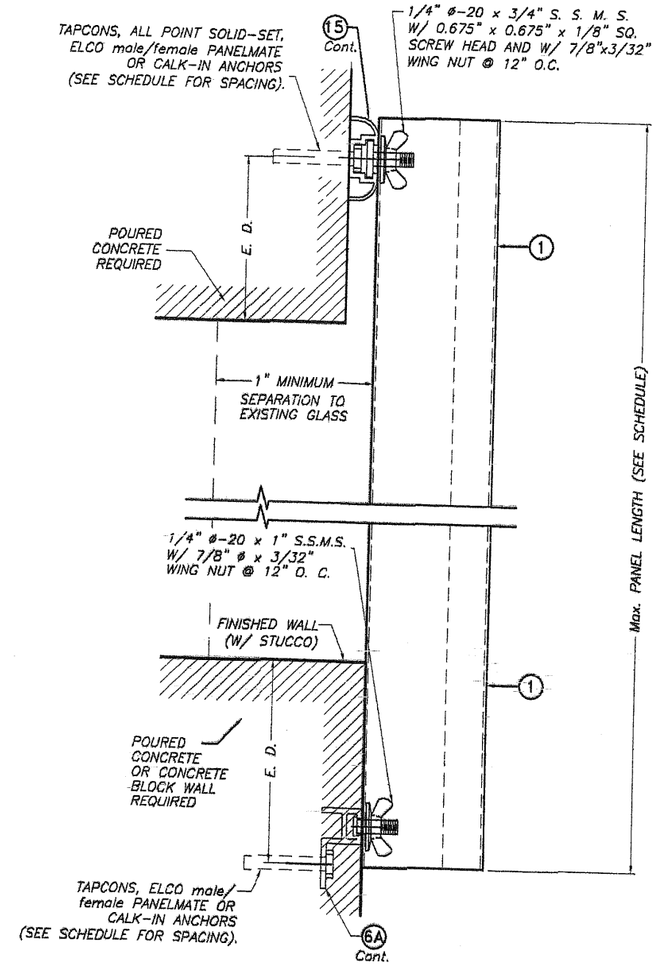

WALL MOUNTING INSTALLATION
SECTION 5

SCALE : 3/8" = 1"

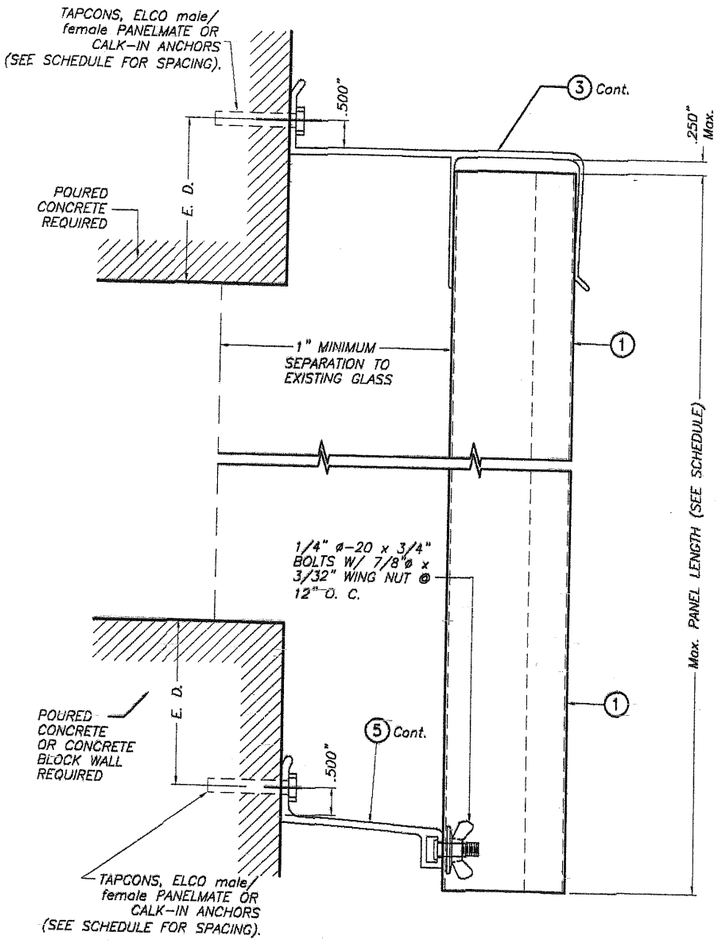

BUILD OUT INSTALLATION
SECTION 6

SCALE : 3/8" = 1"

E. D. = EDGE DISTANCE (SEE SCHEDULE ON SHEETS 10 OF 15)

NOTE FOR COMBINATION OF SECTIONS :

WALL/FLOOR/CEILING MOUNTING SECTIONS CAN BE COMBINED IN ANY WAY TO SUIT ANY INSTALLATION.

+ +
SIDE WALK BOLTS ARE 3/4"øx3/32"THICK HEAD MACHINE SCREW W/LENGTH AS PER NOTES A.2 & B.2 (SHEET 1)
+ +
TRUSS HEAD BOLTS ARE 1/2"øx1/8"THICK HEAD MACHINE SCREW W/LENGTH AS PER NOTES A.2 & B.2 (SHEET 1)

WALTER A. TILLIT JR. LICENSE No. 44167 STATE OF FLORIDA PROFESSIONAL ENGINEER

FLORIDA BUILDING CODE (Non High Velocity Hurricane Zone)

©2011 TILTECO, INC.

TILTECO INC.
TILLIT TESTING & ENGINEERING COMPANY
6355 N.W. 36th. St., Ste. 305, VIRGINIA GARDENS, Fl. 33166
Phone : (305)871-1530 . Fax : (305)871-1531
EB-0006719
WALTER A. TILLIT Jr. P.E.
FLORIDA Lic. # 44167

0.040" BERTHA ALUMINUM STORM PANEL (2.25" DEEP)

EASTERN METAL SUPPLY, INC
4268 WEST ROADS DRIVE
WEST PALM BEACH, FL. 33407
PHONE: (561)209-8263, FAX: (561)841-1716

REV. No	DESCRIPTION	DATE	REV. No	DESCRIPTION	DATE
1	OLD 08-145	12/06/11	3		
2			4		

L.G./R.E./A.G.
DRAWN BY:

12/06/11
DATE:

11-224
DRAWING No

SHEET 4 OF 15

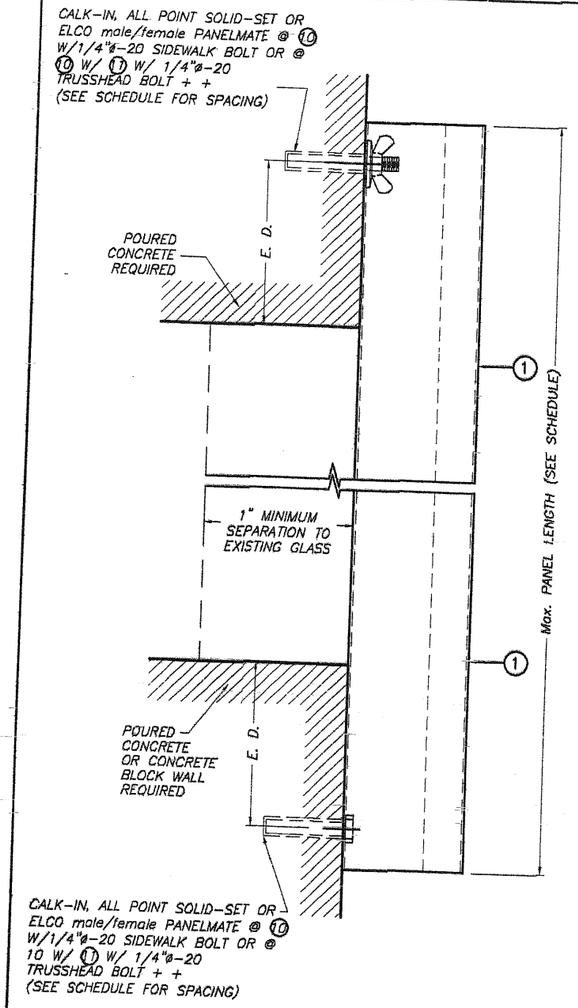

WALL MOUNTING INSTALLATION (D. M.) SECTION 7

SCALE : 3/8" = 1"

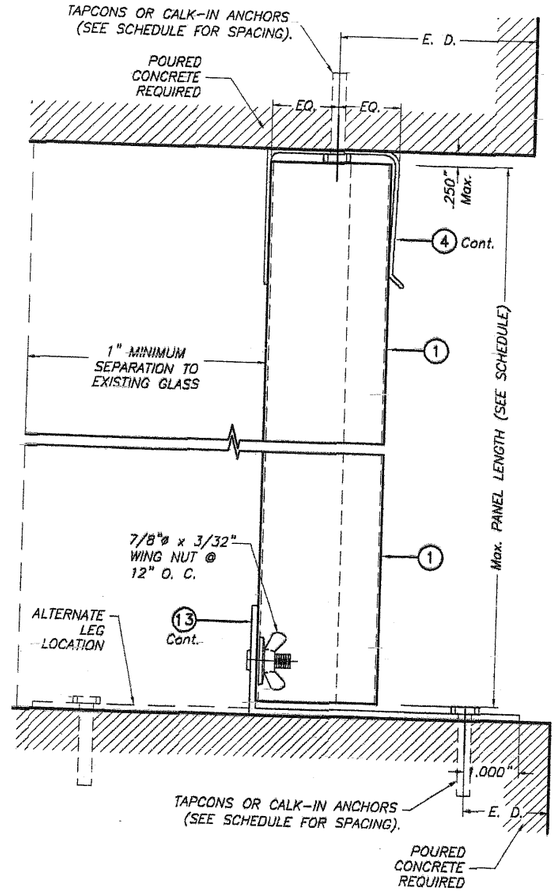

CEILING & FLOOR MOUNTING INSTALLATION – SECTION 8

SCALE : 3/8" = 1"

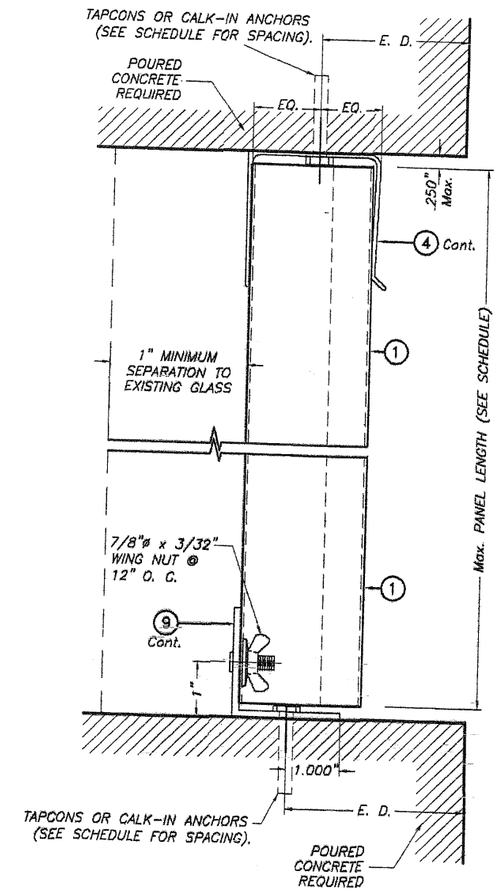

ALTERNATE CEILING & FLOOR MOUNTING INSTALLATION – SECTION 8A

SCALE : 3/8" = 1"

ALTERNATE CEILING & FLOOR MOUNTING INSTALLATION – SECTION 8A VALID ONLY FOR Max. A.S.D DESIGN PRESSURE RATING OF +70, –75 PSF.

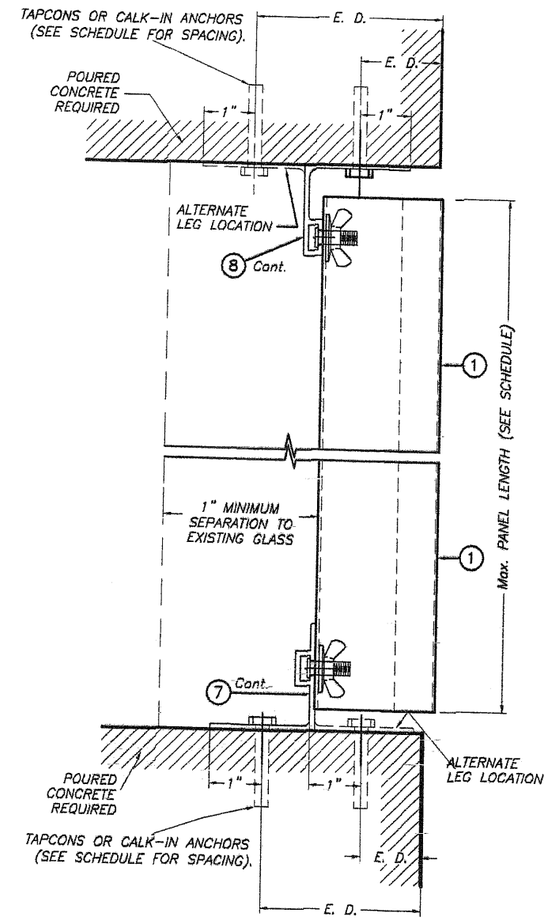

CEILING & FLOOR MOUNTING INSTALLATION – SECTION 9

SCALE : 3/8" = 1"

E. D. = EDGE DISTANCE (SEE SCHEDULE ON SHEET 10 OF 15)

NOTE FOR COMBINATION OF SECTIONS :

WALL/FLOOR/CEILING MOUNTING SECTIONS CAN BE COMBINED IN ANY WAY TO SUIT ANY INSTALLATION.

+ +
SIDE WALK BOLTS ARE 3/4"øx3/32"THICK HEAD MACHINE SCREW W/LENGTH AS PER NOTES A.2 & B.2 (SHEET 1)
+ +
TRUSS HEAD BOLTS ARE 1/2"øx1/8"THICK HEAD MACHINE SCREW W/LENGTH AS PER NOTES A.2 & B.2 (SHEET 1)

WALTER A. TILLIT JR. LICENSE No. 44167 12/7/ STATE OF FLORIDA PROFESSIONAL ENGINEER

FLORIDA BUILDING CODE (Non High Velocity Hurricane Zone)

©2011 TILTECO, INC.

TILTECO INC.
TILLIT TESTING & ENGINEERING COMPANY
6355 N.W. 36th. St., Ste. 305, VIRGINIA GARDENS, FL. 33166
Phone : (305)871-1530 . Fax : (305)871-1531
EB-0006719
WALTER A. TILLIT Jr. P.E.
FLORIDA Lic. # 44167

0.040" BERTHA ALUMINUM STORM PANEL (2.25" DEEP)

EASTERN METAL SUPPLY, INC
4268 WEST ROADS DRIVE
WEST PALM BEACH, FL. 33407
PHONE: (561)209-8263, FAX: (561)841-1716

REV. No	DESCRIPTION	DATE	REV. No	DESCRIPTION	DATE
1	OLD 08-145	12/06/11	3		
2			4		

L.G./R.E./A.G.
DRAWN BY:
12/06/11
DATE:
11-224
DRAWING No
SHEET 5 OF 15

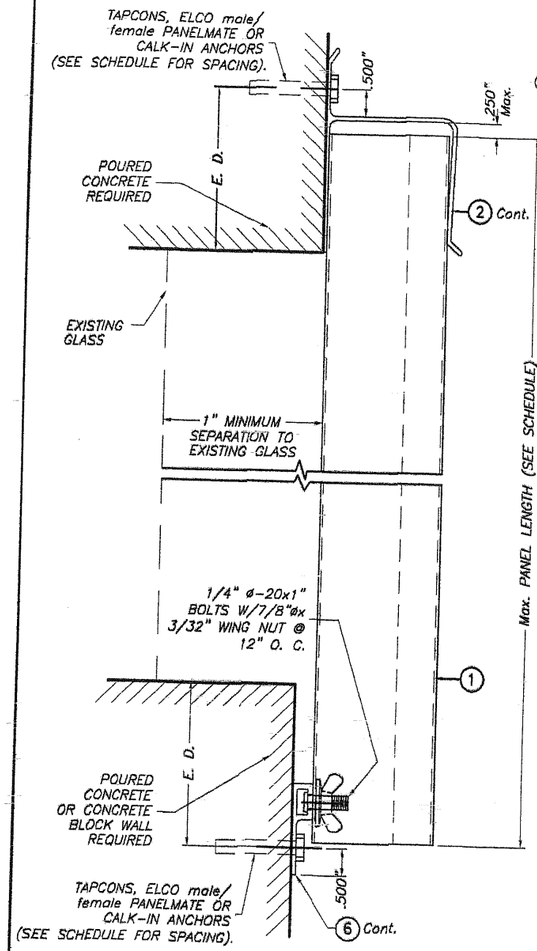

SECTION 10A

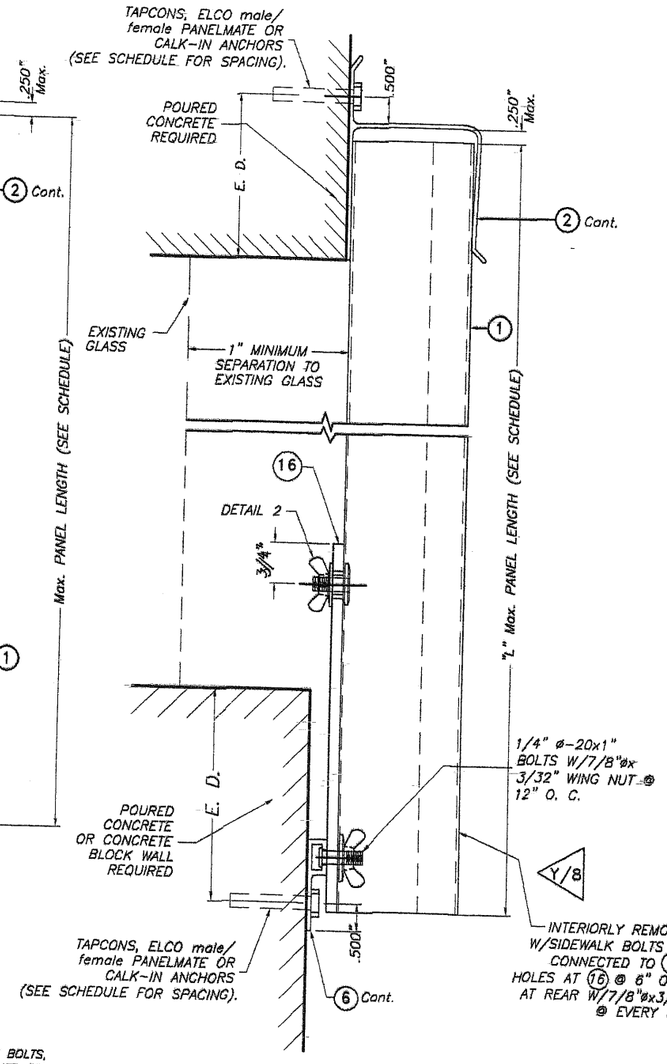

SECTION 10B

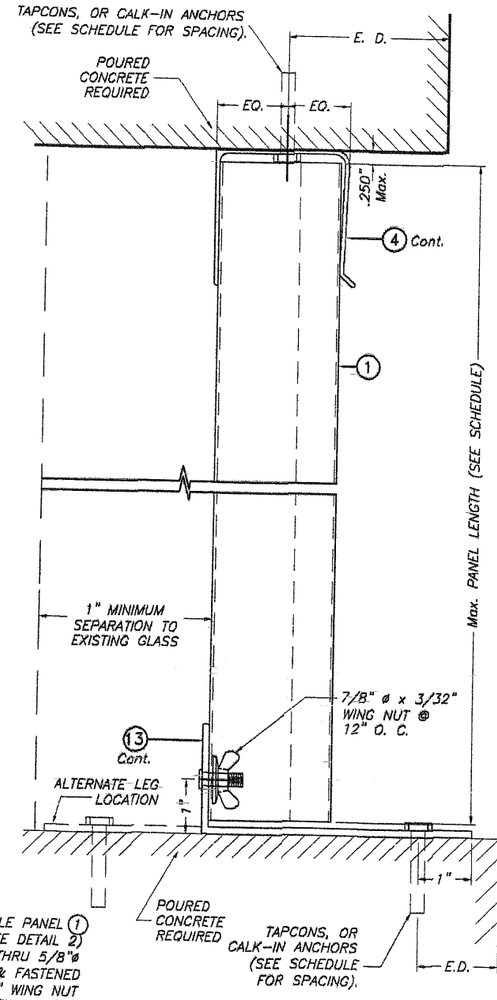

SECTION 11A

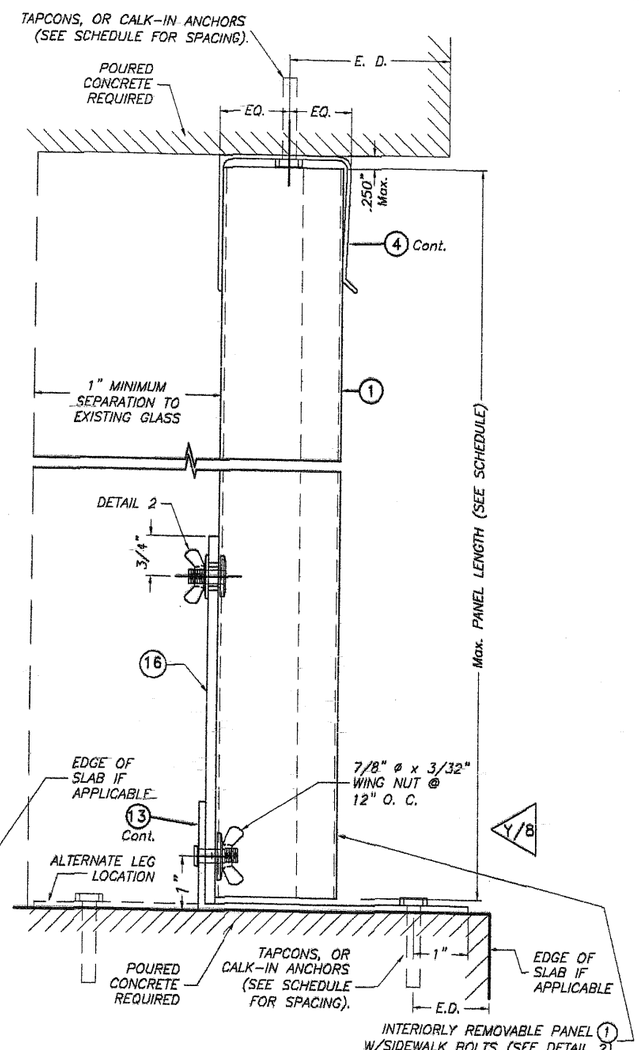

SECTION 11B

CEILING & FLOOR MOUNTING INSTALLATIONS

SECTIONS 11

SCALE : 3/8" = 1"

WALL MOUNTING INSTALLATIONS

SECTIONS 10

SCALE : 3/8" = 1"

INSTALLATIONS VALID FOR PANELS 1 USED JOINTLY WITH INTERIORLY REMOVABLE PANELS 1

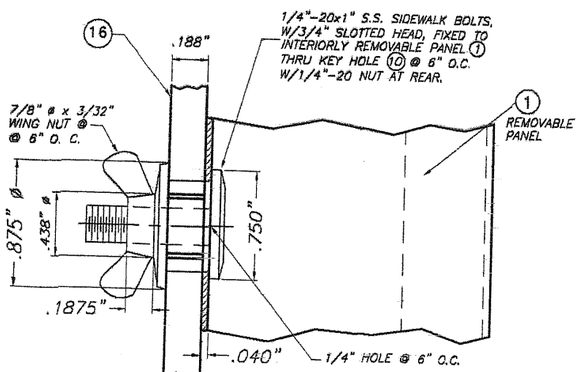

DETAIL 2 – INSTALLATION OF 1/4"x1" SIDEWALK BOLTS @ REMOVABLE PANEL

SCALE: 1" = 1"

E. D. = EDGE DISTANCE (SEE SCHEDULE ON SHEET 10 OF 15)

NOTE FOR COMBINATION OF SECTIONS :

WALL/FLOOR/CEILING MOUNTING SECTIONS CAN BE COMBINED IN ANY WAY TO SUIT ANY INSTALLATION.

WALTER A. TILLIT JR. LICENSE No. 44167 STATE OF FLORIDA PROFESSIONAL ENGINEER

FLORIDA BUILDING CODE (Non High Velocity Hurricane Zone)

©2011 TILTECO, INC.

TILTECO INC.
TILLIT TESTING & ENGINEERING COMPANY
6355 N.W. 36th. St., Ste. 305, VIRGINIA GARDENS, FL 33166
Phone : (305)871-1530 . Fax : (305)871-1531
EB-0006719
WALTER A. TILLIT Jr. P.E.
FLORIDA Lic. # 44167

0.040" BERTHA ALUMINUM STORM PANEL (2.25" DEEP)

EASTERN METAL SUPPLY, INC
4268 WEST ROADS DRIVE
WEST PALM BEACH, FL 33407
PHONE: (561)209-8263, FAX: (561)841-1716

REV. No	DESCRIPTION	DATE	REV. No	DESCRIPTION	DATE
1	OLD 08-145	12/08/11	3		
2			4		

L.G./R.E./A.G.
DRAWN BY:

12/06/11
DATE:

11-224
DRAWING No

SHEET 6 OF 15

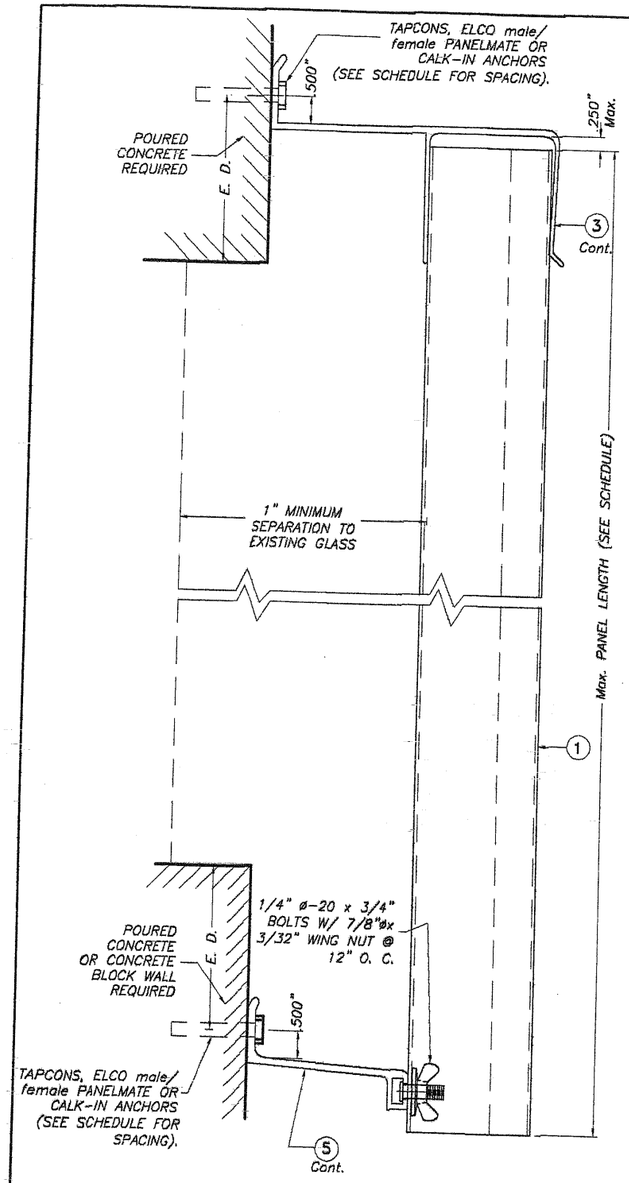

SECTIONS 12A

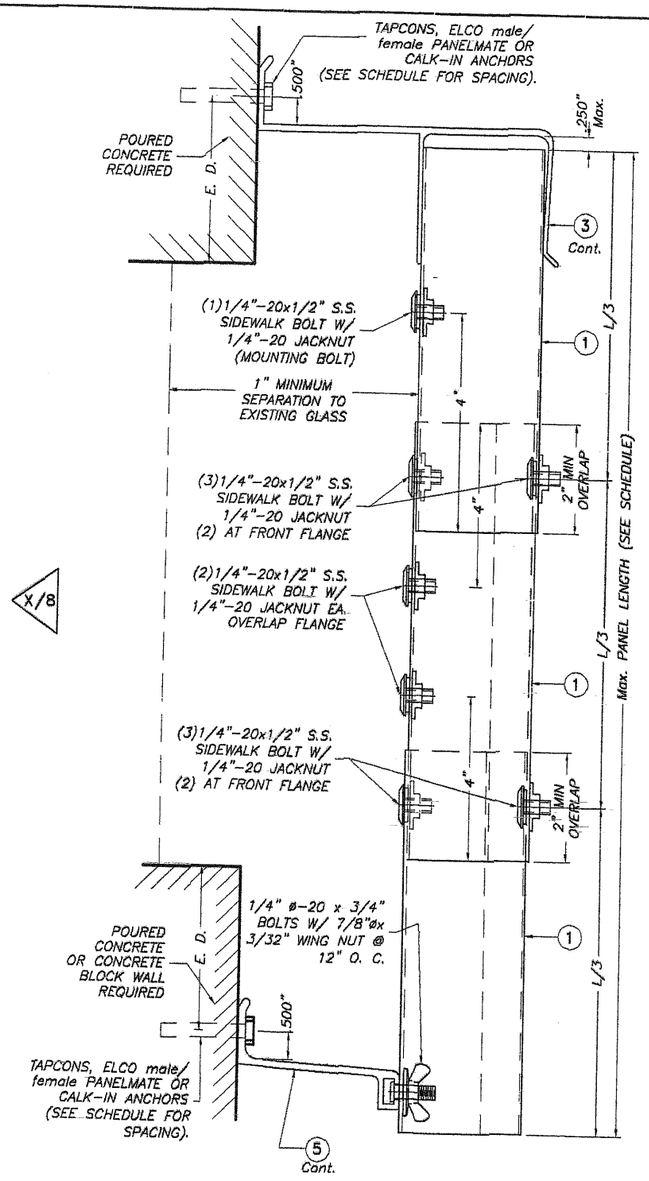

WALL MOUNTING INSTALLATIONS
SECTIONS 12

SCALE : 3/8" = 1"

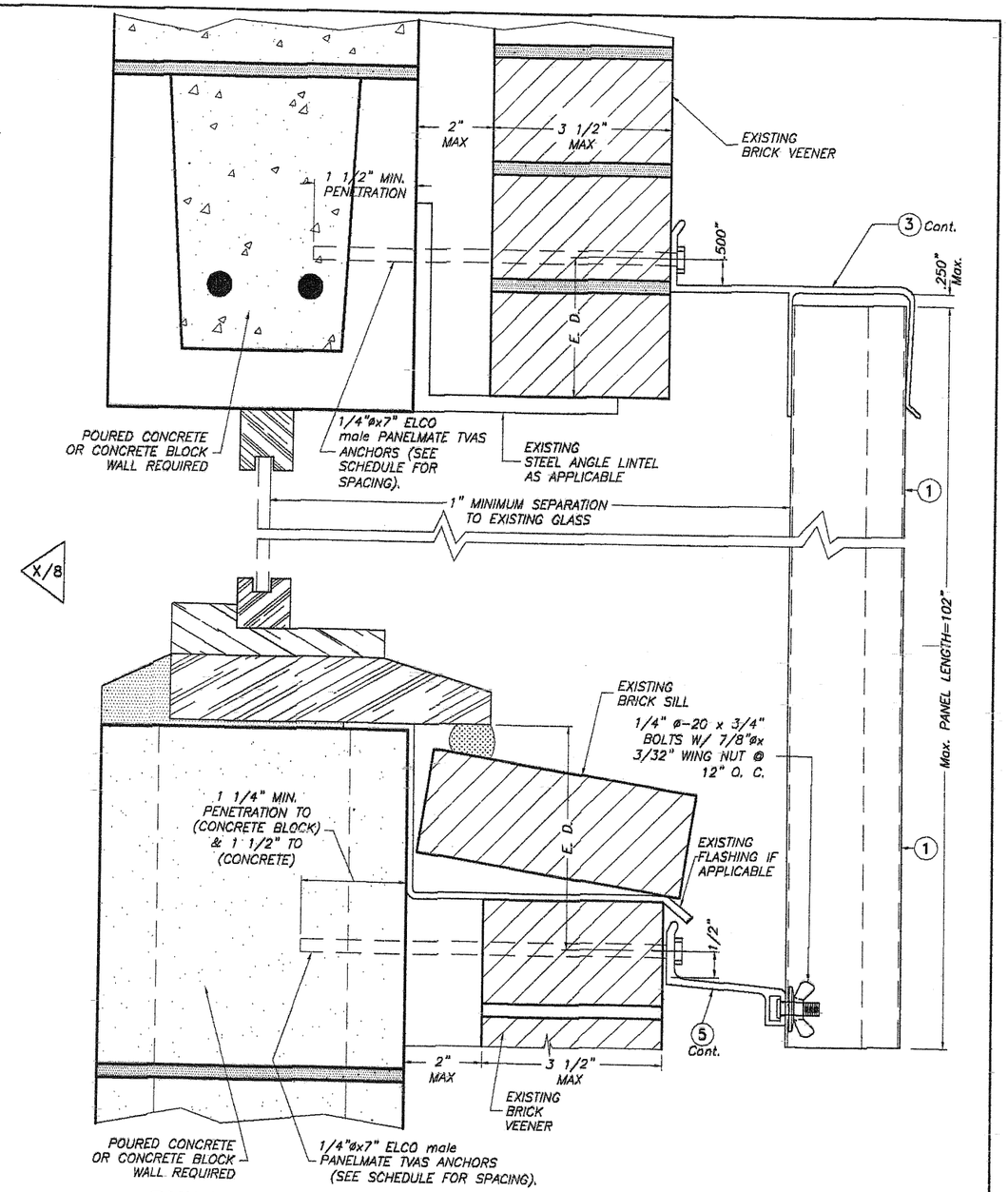

SECTIONS 12B

BUILD OUT INSTALLATION
SECTION 13

SCALE : 3/8" = 1"

E. D. = EDGE DISTANCE (SEE SCHEDULE ON SHEETS 10 OF 15)

NOTE FOR COMBINATION OF SECTIONS :

WALL/FLOOR/CEILING MOUNTING SECTIONS CAN BE COMBINED IN ANY WAY TO SUIT ANY INSTALLATION.

INSTALLATIONS VALID FOR PANELS (1) USED JOINTLY WITH INTERIORLY REMOVABLE PANELS (1)

WALTER A. TILLIT JR. LICENSE No. 44167 STATE OF FLORIDA PROFESSIONAL ENGINEER

FLORIDA BUILDING CODE (Non High Velocity Hurricane Zone)

©2011 TILTECO, INC.

TILTECO INC.
TILLIT TESTING & ENGINEERING COMPANY
6355 N.W. 36th. St., Ste. 305, VIRGINIA GARDENS, FL 33166
Phone : (305)871-1530 . Fax : (305)871-1531
EB-0006719
WALTER A. TILLIT Jr. P.E.
FLORIDA Lic. # 44167

0.040" BERTHA ALUMINUM STORM PANEL (2.25" DEEP)

EASTERN METAL SUPPLY, INC
4268 WEST ROADS DRIVE
WEST PALM BEACH, FL. 33407
PHONE: (561)209-8263, FAX: (561)841-1716

REV. No	DESCRIPTION	DATE	REV. No	DESCRIPTION	DATE
1	QLD 08-145	12/08/11	3		
2			4		

L.G./R.E./A.G.
DRAWN BY:
12/06/11
DATE:
11-224
DRAWING No
SHEET 7 OF 15

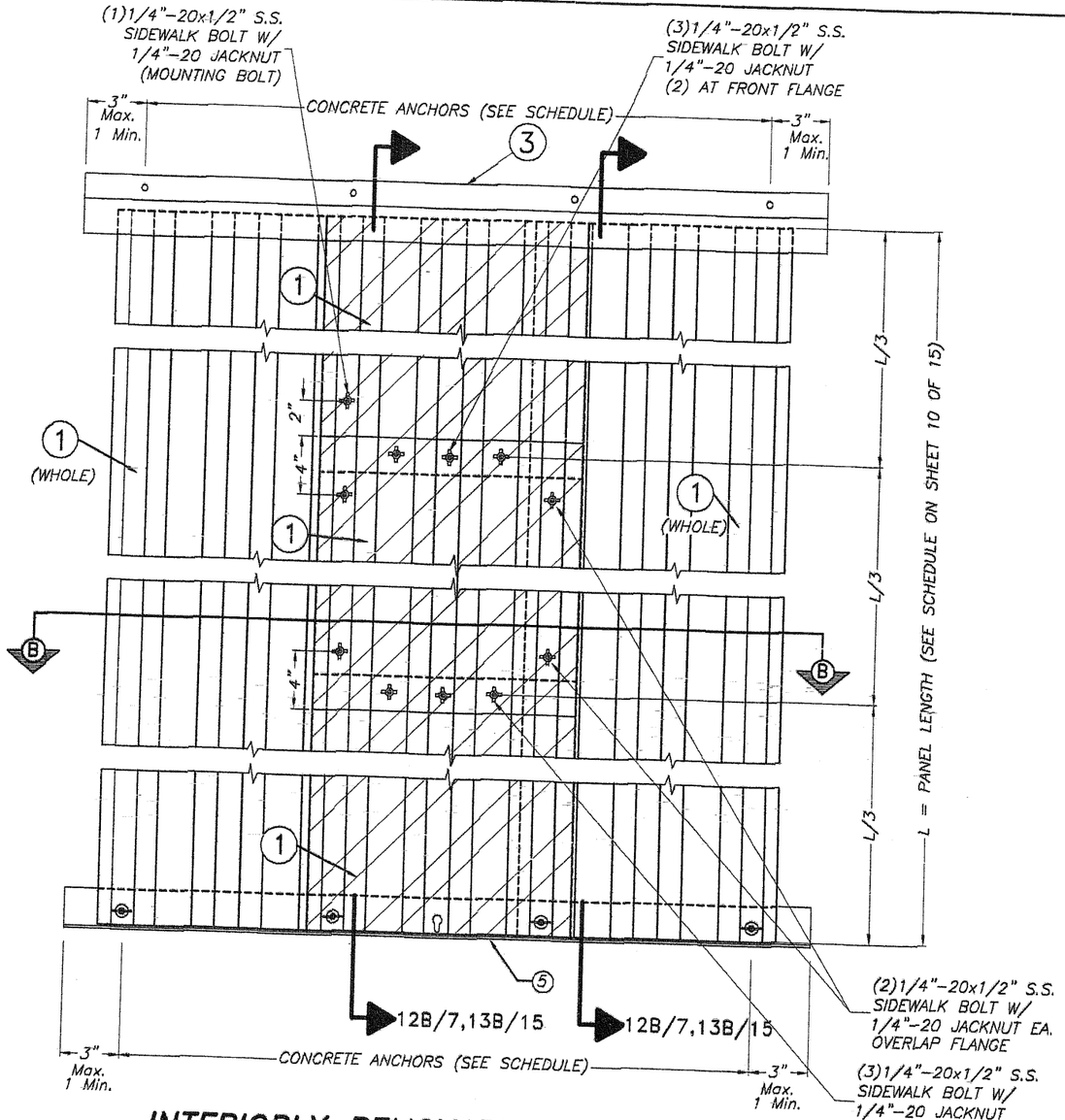

INTERIORLY REMOVABLE STORM PANEL ELEVATION X

SCALE : 1/8" = 1"

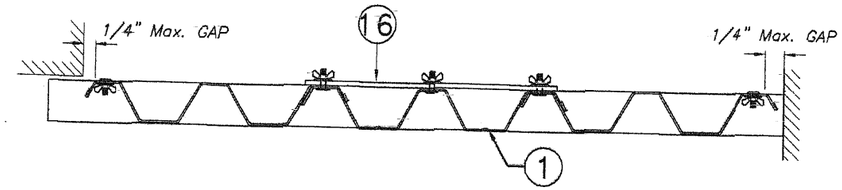

SECTION B'-B'

SCALE : 1/8" = 1"

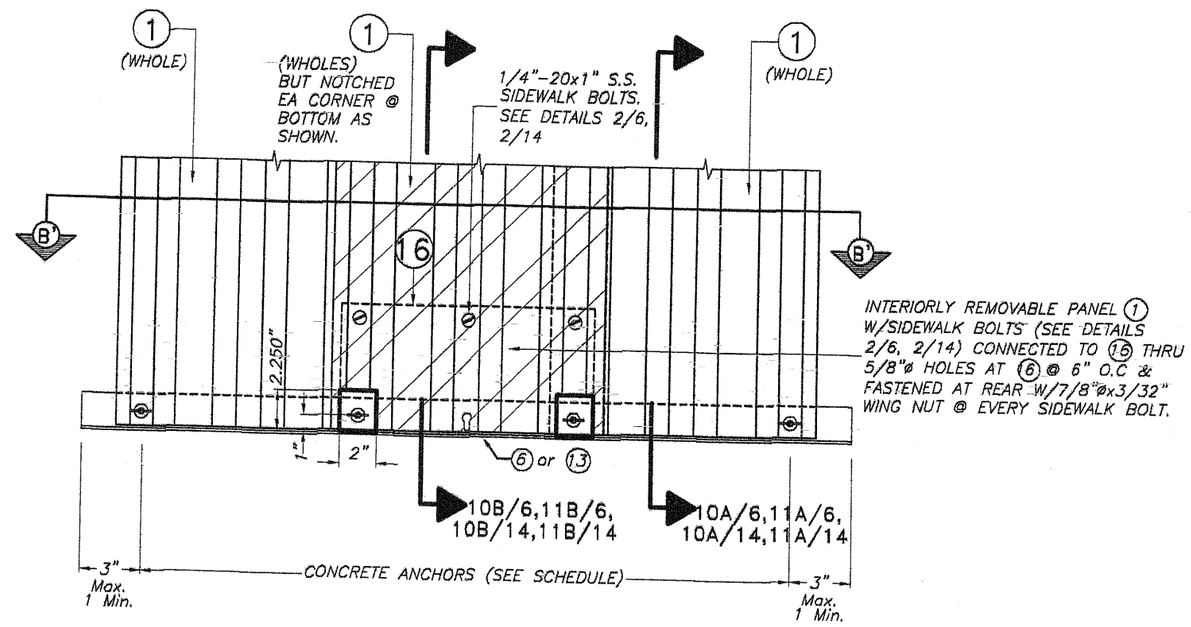

INTERIORLY REMOVABLE STORM PANEL PARTIAL ELEVATION Y

SCALE : 1/8" = 1"

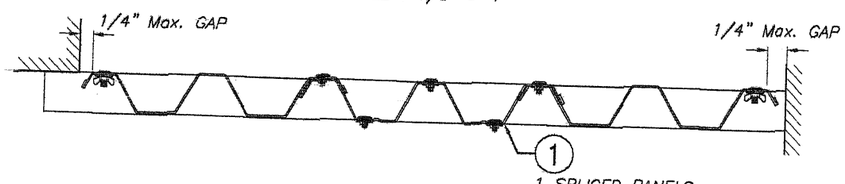

SECTION B-B

SCALE : 1/8" = 1"

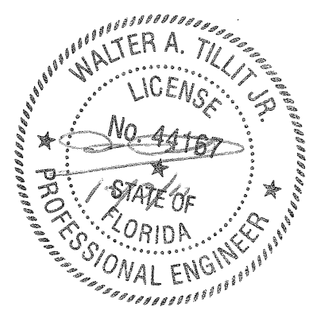

FLORIDA BUILDING CODE (Non High Velocity Hurricane Zone)

©2011 TILTECO, INC.

TILTECO INC.
TILLIT TESTING & ENGINEERING COMPANY
6355 N.W. 36th. St., Ste. 305, VIRGINIA GARDENS, FL 33166
Phone : (305)871-1530 . Fax : (305)871-1531
EB-0006719
WALTER A. TILLIT Jr. P.E.
FLORIDA Lic. # 44167

0.040" BERTHA ALUMINUM STORM PANEL (2.25" DEEP)

EASTERN METAL SUPPLY, INC
4268 WEST ROADS DRIVE
WEST PALM BEACH, FL. 33407
PHONE: (561)209-8263, FAX: (561)841-1716

REV. No	DESCRIPTION	DATE	REV. No	DESCRIPTION	DATE
1	OLD 08-145	12/06/11	3		
2			4		

L.G./R.E./A.G.
DRAWN BY:

12/06/11
DATE:

11-224
DRAWING No

SHEET 8 OF 15

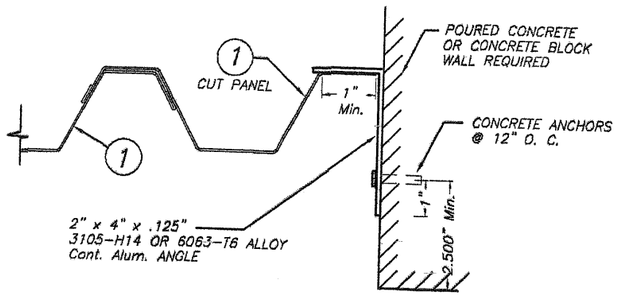

CASE A (Plan)

SCALE: 1/4" = 1"

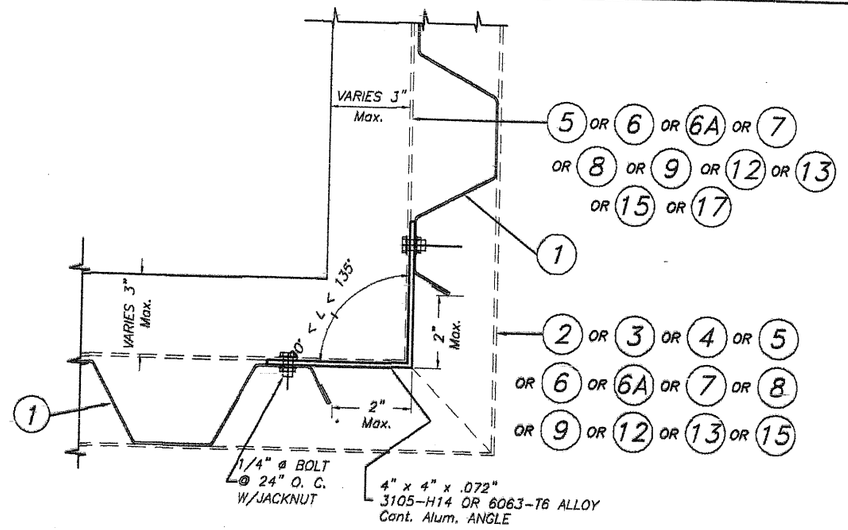

CASE B (Plan)

SCALE: 1/4" = 1"

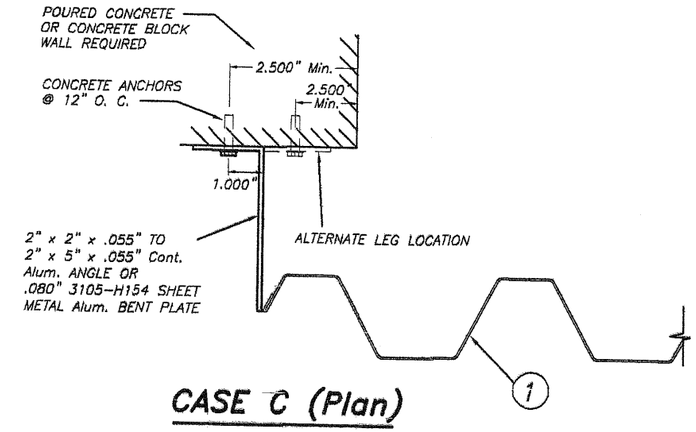

CASE C (Plan)

SCALE: 1/4" = 1"

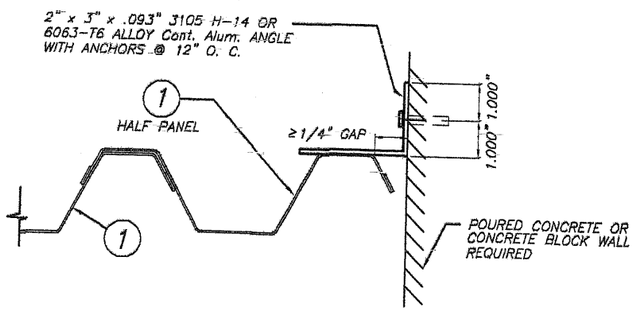

CASE D (Plan)

SCALE: 1/4" = 1"

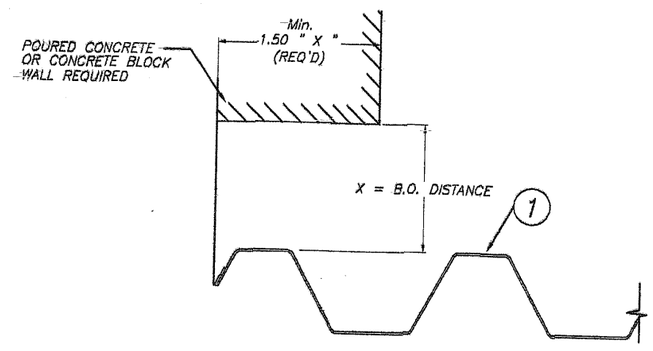

CASE E (Plan) *

SCALE: 1/4" = 1"

END CLOSURES DETAILS

WALTER A. TILLIT JR.
LICENSE
No. 44167
STATE OF
FLORIDA
PROFESSIONAL ENGINEER

FLORIDA BUILDING CODE (Non High Velocity Hurricane Zone)

©2011 TILTECO, INC.

TILTECO INC.
TILLIT TESTING & ENGINEERING COMPANY
6355 N.W. 36th. St., Ste. 305, VIRGINIA GARDENS, FL 33166
Phone : (305)871-1530 . Fax : (305)871-1531
EB-0006719
WALTER A. TILLIT Jr. P.E.
FLORIDA Lic. # 44167

0.040" BERTHA ALUMINUM STORM PANEL
(2.25" DEEP)

EASTERN METAL SUPPLY, INC

4268 WEST ROADS DRIVE
WEST PALM BEACH, FL. 33407
PHONE: (561)209-8263, FAX: (561)841-1716

REV. No	DESCRIPTION	DATE	REV. No	DESCRIPTION	DATE
1	OLD 08-145	12/06/11	3		
2			4		

L.G./R.E./A.G.
DRAWN BY:

12/06/11
DATE:

11-224
DRAWING No

SHEET 9 OF 15

MAXIMUM A.S.D. DESIGN PRESSURE RATING (p.s.f.) WITH CORRESPONDING MAXIMUM PANEL LENGTH "L" (Ft.) AND CORRESPONDING ANCHOR SPACING "S" (in.) SCHEDULE FOR INSTALLATIONS IN CONCRETE, CONCRETE BLOCK AND WOOD FRAME STRUCTURES *

MAXIMUN A.S.D. DESIGN PRESURE RATING (p.s.f.)	Max. PANEL LENGTH L (Ft.) 0.040" ALUMINUM PANEL ①				Max. ANCHOR SPACING "S" (in.) PANELS ① **
	SECTIONS: 1, 3, 4, 6, 7, 8, 8A†, 9, 11	SECTIONS: 2, 5, 10	SECTION: 12	SECTION: 13	ALL SECTIONS
+25.0, -25.0	12'-0"	12'-0"	11'-9"	8'-6"	12"††
+25.0, -30.0	12'-0"	11'-5"	10'-9"	8'-6"	12"††
+30.0, -35.0	11'-1"	10'-6"	9'-11"	8'-6"	12"††
+35.0, -40.0	10'-5"	9'-10"	9'-4"	8'-6"	12"††
+40.0, -45.0	9'-10"	9'-4"	8'-9"	8'-6"	12"††
+45.0, -50.0	9'-4"	8'-10"	8'-4"	8'-6"	12"††
+50.0, -55.0	8'-10"	8'-5"	7'-11"	-	12"††
+55.0, -60.0	8'-6"	8'-1"	7'-7"	-	12"††
+60.0, -65.0	8'-0"	7'-9"	7'-4"	-	12"††
+65.0, -70.0	7'-5"	7'-5"	7'-0"	-	12"††
+70.0, -75.0	6'-11"	6'-11"	6'-9"	-	12"††
+75.0, -80.0	6'-6"	6'-6"	6'-6"	-	12"
+80.0, -85.0	6'-1"	6'-1"	6'-1"	-	12"
+85.0, -90.0	5'-9"	5'-9"	5'-9"	-	12"
+90.0, -95.0	5'-6"	5'-6"	5'-6"	-	12"
+95.0, -100.0	5'-2"	5'-2"	5'-2"	-	12"
+100.0, -105.0	4'-11"	4'-11"	4'-11"	-	12"
+105.0, -110.0	4'-9"	4'-9"	4'-9"	-	12"
+110.0, -115.0	4'-6"	4'-6"	4'-6"	-	12"
+115.0, -120.0	4'-4"	4'-4"	4'-4"	-	12"
+120.0, -125.0	4'-2"	4'-2"	4'-2"	-	12"
+125.0, -130.0	4'-0"	4'-0"	4'-0"	-	12"

† SECTION 8A IS ONLY VALID FOR MAX. A.S.D. DESIGN PRESSURE RATING UP TO +70, -75 PSF.

†† Max. ANCHOR SPACING FOR SECTION 8A SHALL BE 6" O.C.

NOTE: MINIMUM PANEL LENGTH IS 3'-0".

** MAXIMUM ANCHOR SPACINGS ARE VALID FOR 3 1/2" EDGE DISTANCE. FOR E. D. LESS THAN 3 1/2", REDUCE ANCHOR SPACING BY MULTIPLYING SPACING SHOWN ON SCHEDULE BY THE FOLLOWING FACTORS. (NOTE : Min. E. D. FOR CALK-IN ANCHORS IS 2 1/2"). FOR THIS OPERATION TO BE POSSIBLE, REDUCED SPACING OBTAINED USING FACTOR SHALL NOT BE LESS THAN MINIMUM SPACING INDICATED FOR EACH ANCHOR TYPE AT ANCHORS LEGEND.

ACTUAL E. D.	FACTOR			
	PANELMATES	TAPCON	SILID-SET	CALK-IN
3"	.86	-	.78	.75
2 1/2"	.71	-	-	.50
2"	.50	-	-	-
1 1/2"	-	.35	-	-

ANCHORS LEGEND

ANCHORS TYPE	ANCHOR MIN. SPACING
TAPCON/ PANELMATES	3.0"
CALK-IN	2.5"
SOLID-SET	3.5"

* SEE NOTES ON SHEET 11 THRU 15 OF 15 FOR PANEL LENGTH LIMITATIONS FOR FLOOR/CEILING INSTALLATIONS INTO WOOD FRAME BUILDINGS.

WALTER A. TILLIT JR. LICENSE No. 44167 STATE OF FLORIDA PROFESSIONAL ENGINEER

FLORIDA BUILDING CODE (Non High Velocity Hurricane Zone)

©2011 TILTECO, INC.

TILTECO INC.
TILLIT TESTING & ENGINEERING COMPANY
6355 N.W. 36th. St., Ste. 305, VIRGINIA GARDENS, FL 33166
Phone : (305)871-1530 . Fax : (305)871-1531
EB-0006719
WALTER A. TILLIT Jr. P.E.
FLORIDA Lic. # 44167

0.040" BERTHA ALUMINUM STORM PANEL (2.25" DEEP)

EASTERN METAL SUPPLY, INC
4268 WEST ROADS DRIVE
WEST PALM BEACH, FL. 33407
PHONE: (561)209-8263, FAX: (561)841-1716

REV. No.	DESCRIPTION	DATE	REV. No	DESCRIPTION	DATE
1	OLD 08-145	12/06/11	3		
2			4		

L.G./R.E./A.G.
DRAWN BY:
12/06/11
DATE:
11-224
DRAWING No
SHEET 10 OF 15

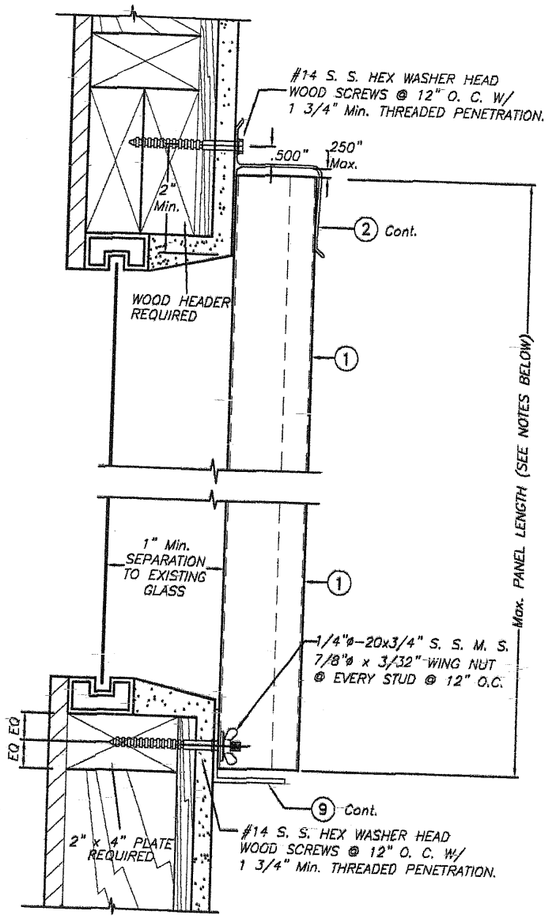

WALL MOUNTING INSTALLATION
ALTERNATIVE 1
SCALE : 1/4" = 1"

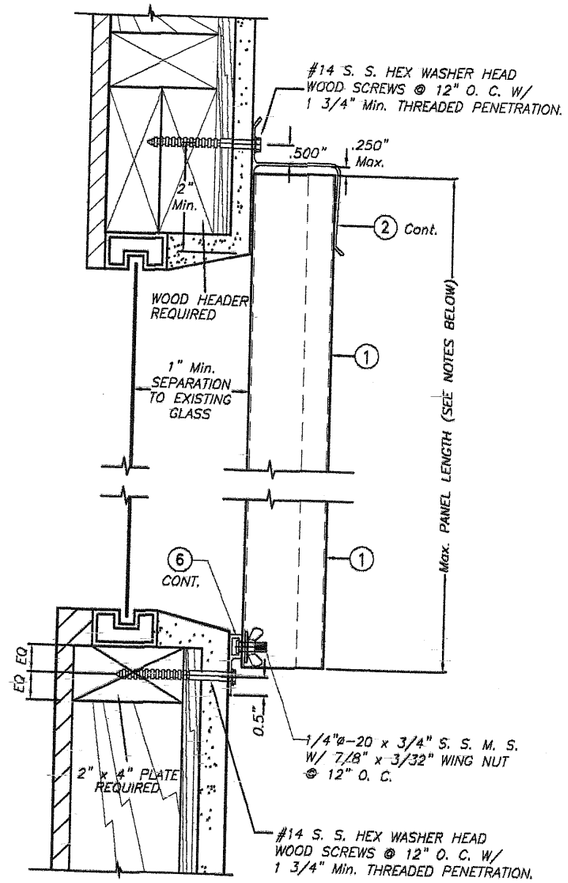

WALL MOUNTING INSTALLATION
ALTERNATIVE 2
SCALE : 1/4" = 1"

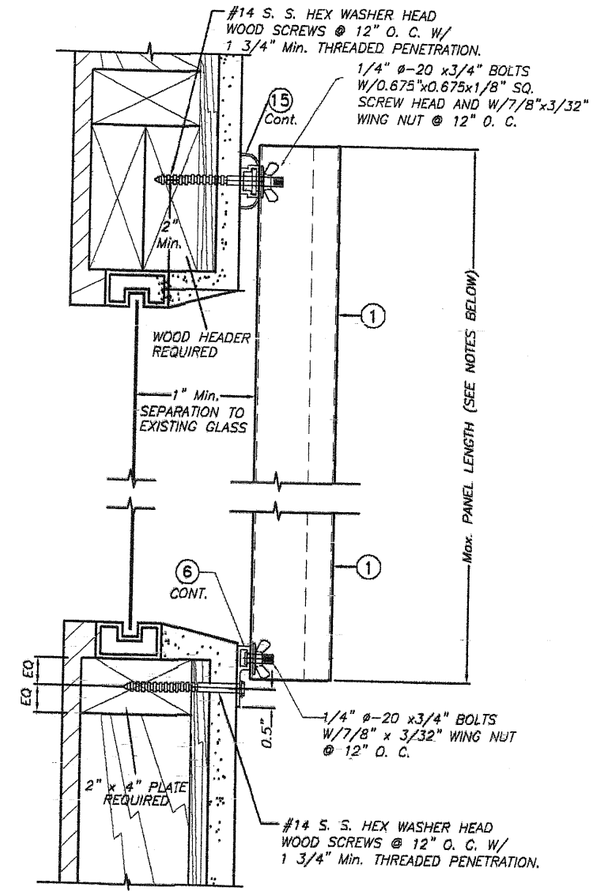

WALL MOUNTING INSTALLATION
ALTERNATIVE 3
SCALE : 1/4" = 1"

NOTE FOR COMBINATION OF SECTIONS:

WALL MOUNTING SECTIONS CAN BE COMBINED IN ANY WAY TO SUIT ANY INSTALLATION.

NOTES:

1. INSTALLATIONS ARE ONLY VALID FOR MAX. A.S.D. DESIGN PRESSURE RATING AND Max. PANEL LENGTH AS PER SCHEDULES SHOWN ON SHEET 10 OF 15 EXCEPT THAT PANEL'S LENGTHS FOR FLOOR/CEILING INSTALLATIONS SHALL BE LIMITED TO 109"
2. FOR WOOD FRAME CONSTRUCTION: WOOD MEMBERS TO BE SOUTHERN PINE No. 2, W/ SPECIFIC DENSITY OF 0.55 OR EQUAL.

INSTALLATION DETAILS ON EXISTING WOOD BUILDINGS

WALTER A. TILLIT JR.
LICENSE
No. 44167
STATE OF FLORIDA
PROFESSIONAL ENGINEER

FLORIDA BUILDING CODE (Non High Velocity Hurricane Zone)

©2011 TILTECO, INC.

TILTECO INC.
TILLIT TESTING & ENGINEERING COMPANY
6355 N.W. 36th. St., Ste. 305, VIRGINIA GARDENS, FL 33166
Phone : (305)871-1530 . Fax : (305)871-1531
EB-0006719
WALTER A. TILLIT Jr. P.E.
FLORIDA Lic. # 44167

0.040" BERTHA ALUMINUM STORM PANEL (2.25" DEEP)

EASTERN METAL SUPPLY, INC
4268 WEST ROADS DRIVE
WEST PALM BEACH, FL. 33407
PHONE: (561)209-8263, FAX: (561)841-1716

REV. No	DESCRIPTION	DATE	REV. No	DESCRIPTION	DATE
1	OLD 08-145	12/08/11	3		
2			4		

L.G./R.E./A.G.
DRAWN BY:

12/06/11
DATE:

11-224
DRAWING No

SHEET 11 OF 15

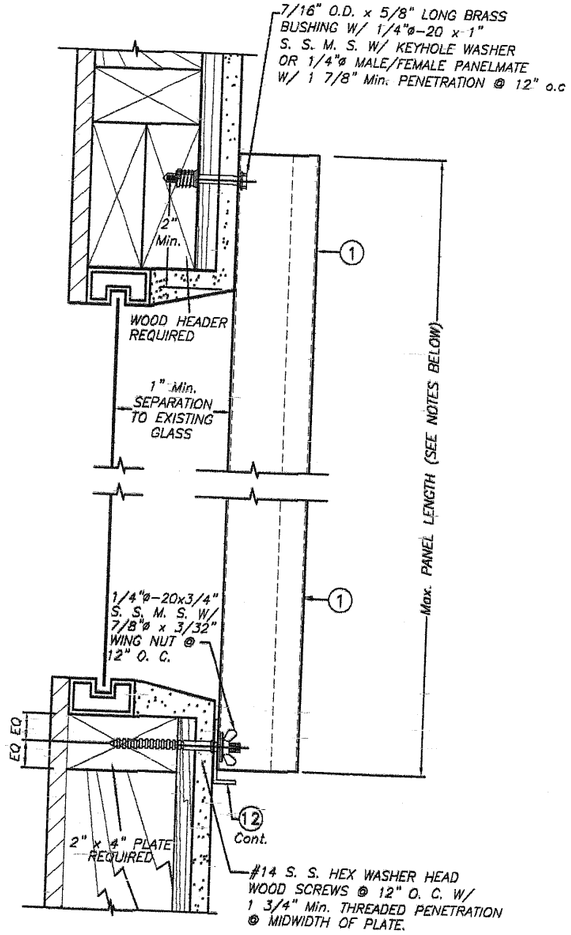

WALL MOUNTING INSTALLATION
ALTERNATIVE 4 SCALE : 1/4" = 1"

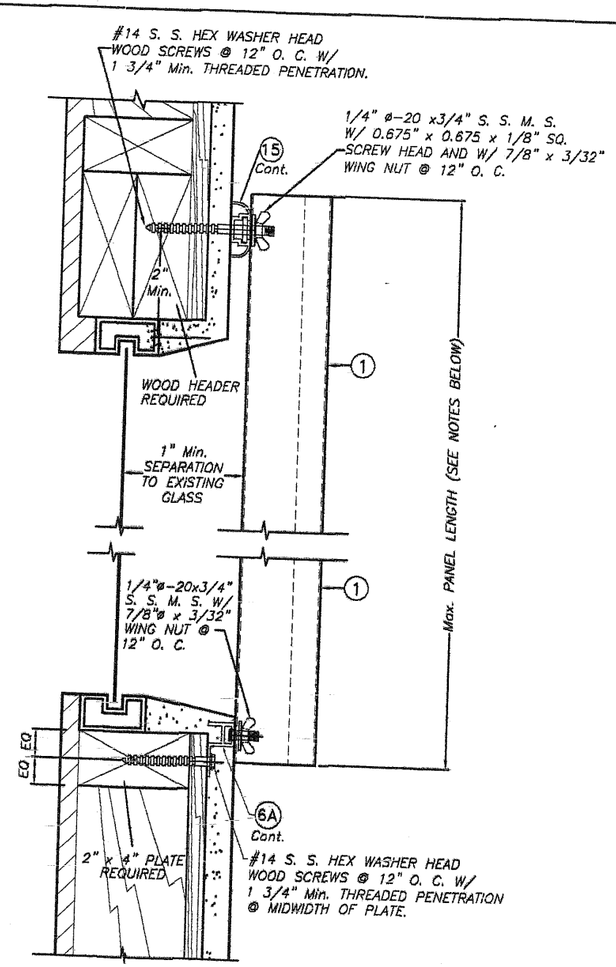

WALL MOUNTING INSTALLATION
ALTERNATIVE 5 SCALE : 1/4" = 1"

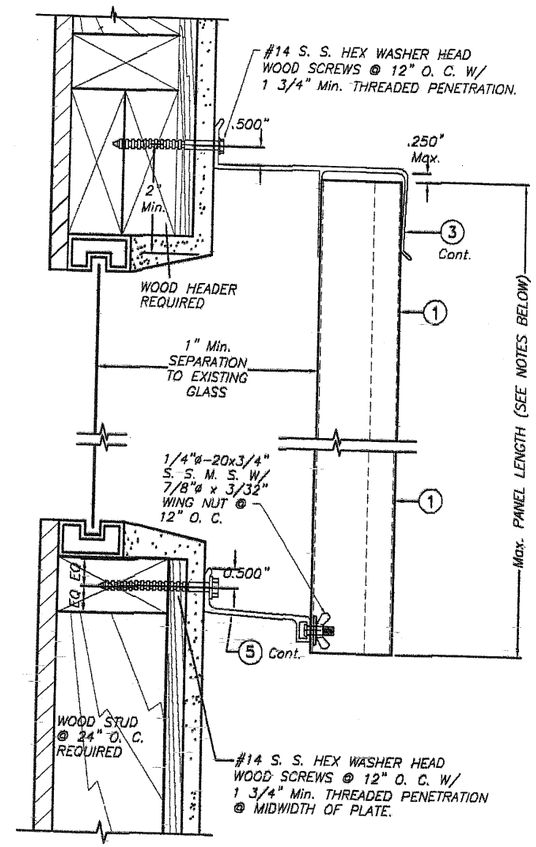

BUILD OUT INSTALLATION
ALTERNATIVE 6 SCALE : 1/4" = 1"

INSTALLATION DETAILS ON EXISTING WOOD BUILDINGS

NOTE FOR COMBINATION OF SECTIONS:

WALL MOUNTING SECTIONS CAN BE COMBINED IN ANY WAY TO SUIT ANY INSTALLATION.

NOTES:

1. INSTALLATIONS ARE ONLY VALID FOR MAX. AS.D. DESIGN PRESSURE RATING AND Max. PANEL LENGTH AS PER SCHEDULES SHOWN ON SHEET 10 OF 15 EXCEPT THAT PANEL'S LENGTHS FOR FLOOR/CEILING INSTALLATIONS SHALL BE LIMITED TO 109"
2. FOR WOOD FRAME CONSTRUCTION: WOOD MEMBERS TO BE SOUTHERN PINE No. 2, W/ SPECIFIC DENSITY OF 0.55 OR EQUAL.

WALTER A. TILLIT JR. LICENSE No. 44167 STATE OF FLORIDA PROFESSIONAL ENGINEER

FLORIDA BUILDING CODE (Non-High Velocity Hurricane Zone)

©2011 TILTECO, INC.

TILTECO INC.
TILLIT TESTING & ENGINEERING COMPANY
6355 N.W. 36th. St., Ste. 305, VIRGINIA GARDENS, FL 33166
Phone : (305)871-1530 . Fax : (305)871-1531
EB-0006719
WALTER A. TILLIT Jr. P.E.
FLORIDA Lic. # 44167

0.040" BERTHA ALUMINUM STORM PANEL (2.25" DEEP)

EASTERN METAL SUPPLY, INC
4268 WEST ROADS DRIVE
WEST PALM BEACH, FL. 33407
PHONE: (561)209-8283, FAX: (561)841-1716

REV. No	DESCRIPTION	DATE	REV. No	DESCRIPTION	DATE
1	OLD 08-145	12/06/11	3		
2			4		

L.G./R.E./A.G. DRAWN BY:
12/06/11 DATE:
11-224 DRAWING No
SHEET 12 OF 15

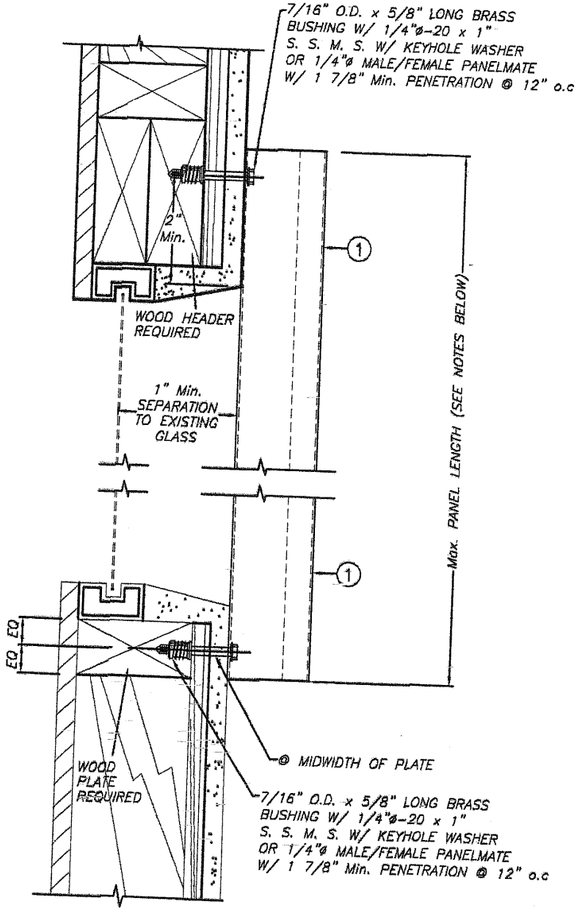

WALL MOUNTING INSTALLATION (D. M.) ALTERNATIVE 7

SCALE : 1/4" = 1"

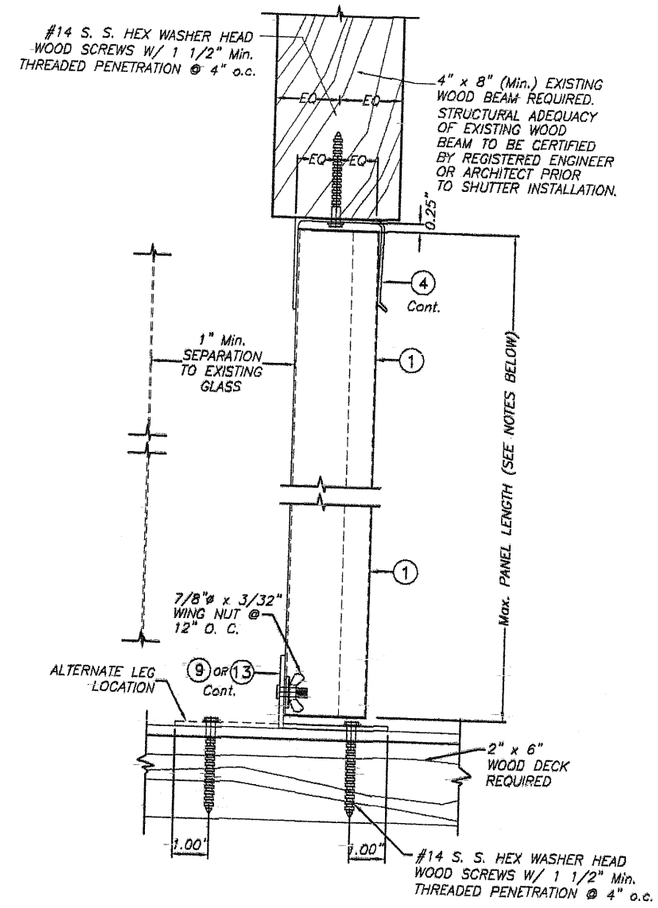

CEILING & FLOOR MOUNTING INSTALLATION ALTERNATIVE 8

SCALE : 1/4" = 1"

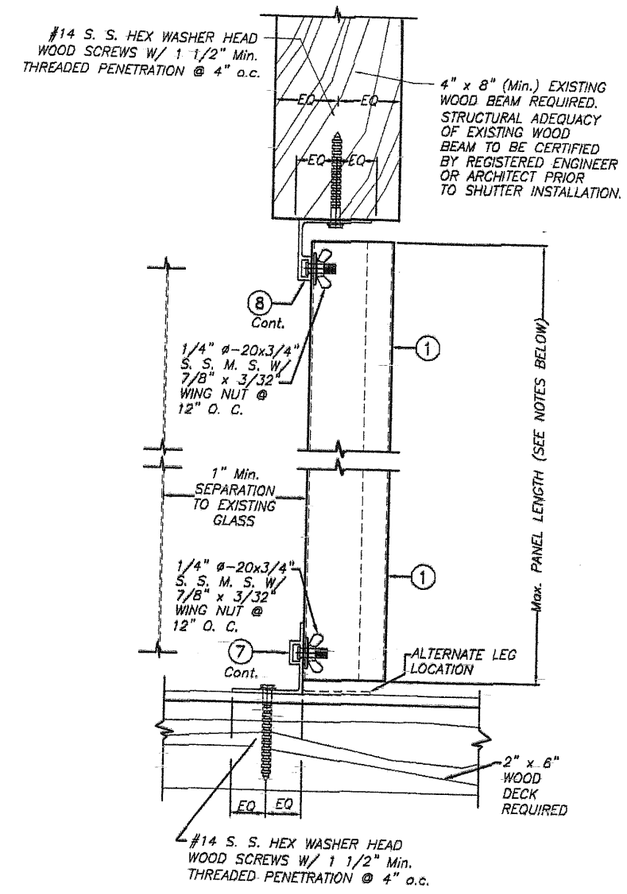

CEILING & FLOOR MOUNTING INSTALLATION ALTERNATIVE 9

SCALE : 1/4" = 1"

INSTALLATION DETAILS ON EXISTING WOOD BUILDINGS

NOTE FOR COMBINATION OF SECTIONS:

WALL MOUNTING SECTIONS CAN BE COMBINED IN ANY WAY TO SUIT ANY INSTALLATION.

NOTES:

1. INSTALLATIONS ARE ONLY VALID FOR MAX. A.S.D. DESIGN PRESSURE RATING AND Max. PANEL LENGTH AS PER SCHEDULES SHOWN ON SHEET 10 OF 15 EXCEPT THAT PANEL'S LENGTHS FOR FLOOR/CEILING INSTALLATIONS SHALL BE LIMITED TO 109"
2. FOR WOOD FRAME CONSTRUCTION: WOOD MEMBERS TO BE SOUTHERN PINE No. 2, W/ SPECIFIC DENSITY OF 0.55 OR EQUAL.

WALTER A. TILLIT JR. LICENSE No. 44167 STATE OF FLORIDA PROFESSIONAL ENGINEER

FLORIDA BUILDING CODE (Non High Velocity Hurricane Zone)

©2011 TILTECO, INC.

TILTECO INC.
TILLIT TESTING & ENGINEERING COMPANY
6355 N.W. 36th. St., Ste. 305, VIRGINIA GARDENS, FL 33166
Phone : (305)871-1530 . Fax : (305)871-1531
EB-0006719
WALTER A. TILLIT Jr. P.E.
FLORIDA Lic. # 44167

0.040" BERTHA ALUMINUM STORM PANEL (2.25" DEEP)

EASTERN METAL SUPPLY, INC
4268 WEST ROADS DRIVE
WEST PALM BEACH, FL. 33407
PHONE: (561)209-8263, FAX: (561)841-1716

REV. No	DESCRIPTION	DATE	REV. No	DESCRIPTION	DATE
1	OLD 08-145	12/08/11	3		
2			4		

L.G./R.E./A.G.
DRAWN BY:

12/06/11
DATE:

11-224
DRAWING No

SHEET 13 OF 15

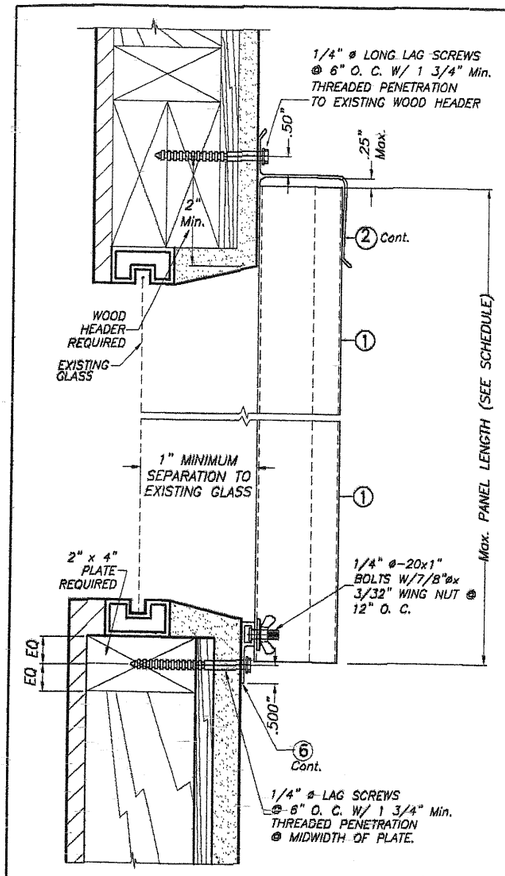

ALTERNATIVE 10A

SCALE : 3/8" = 1"

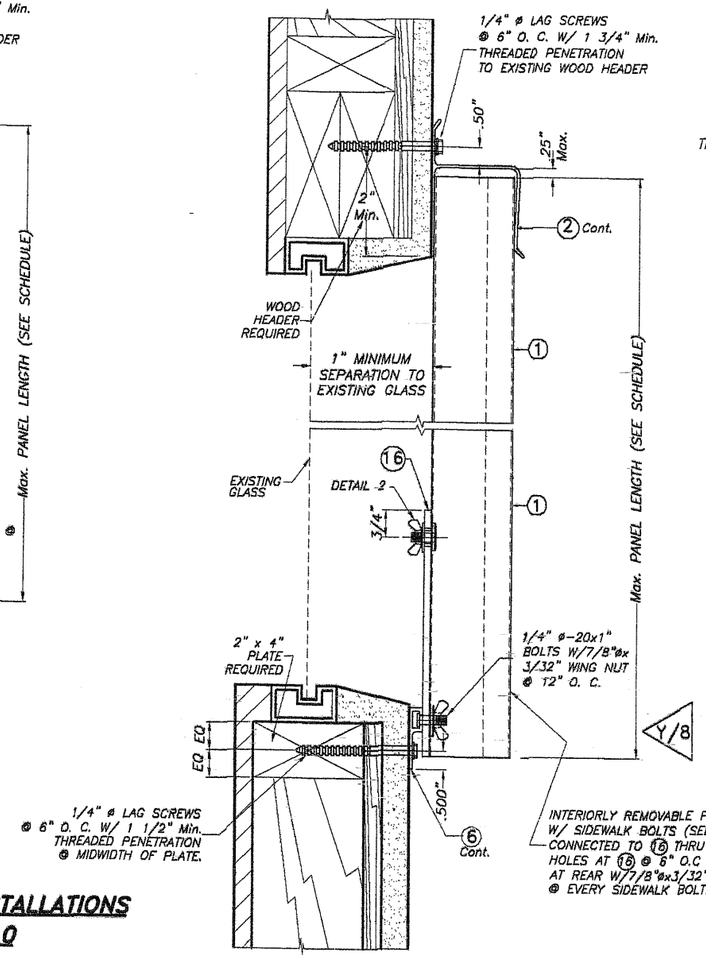

ALTERNATIVE 10B

SCALE : 3/8" = 1"

WALL MOUNTING INSTALLATIONS SECTIONS 10

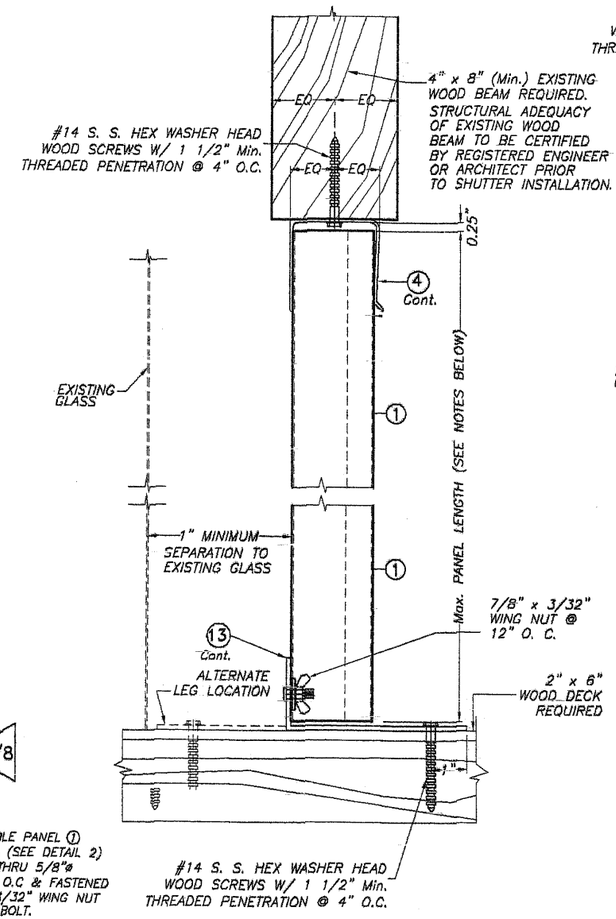

ALTERNATIVE 11A

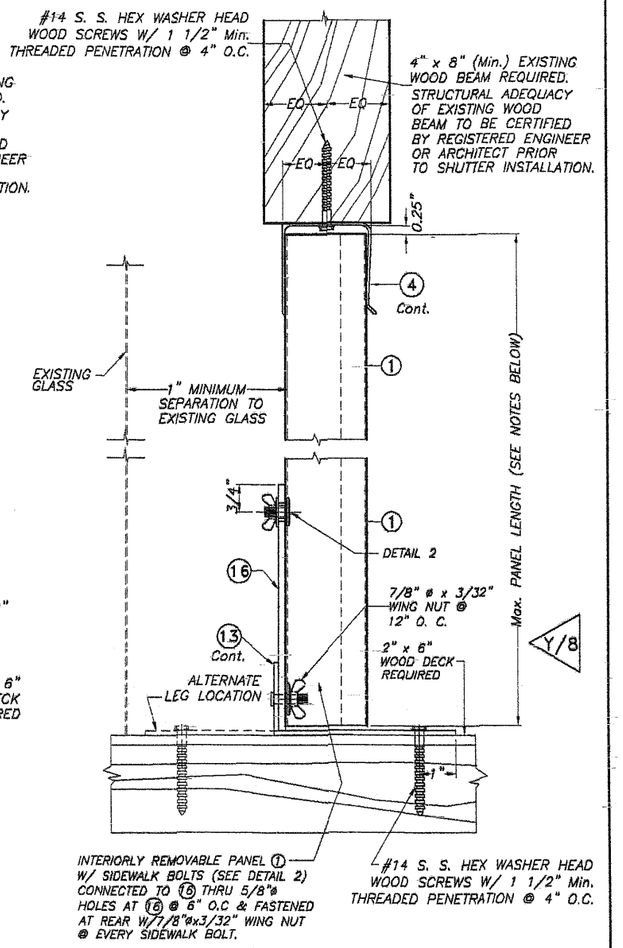

ALTERNATIVE 11B

CEILING & FLOOR MOUNTING INSTALLATIONS SECTIONS 11

SCALE : 1/4" = 1"

INSTALLATION DETAILS ON EXISTING WOOD BUILDINGS VALID FOR PANELS 1 USED JOINTLY WITH INTERIORLY REMOVABLE PANELS 1

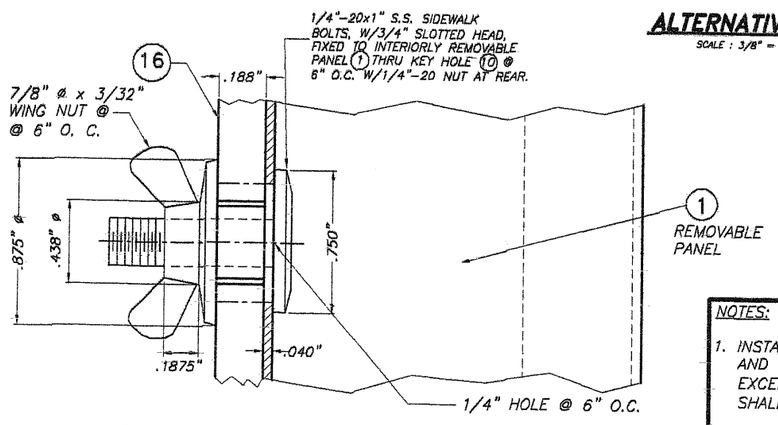

DETAIL 2 – INSTALLATION OF 1/4"x1" SIDEWALK BOLTS @ REMOVABLE PANEL

NOTE FOR COMBINATION OF SECTIONS:

WALL MOUNTING SECTIONS CAN BE COMBINED IN ANY WAY TO SUIT ANY INSTALLATION.

NOTES:

1. INSTALLATIONS ARE ONLY VALID FOR MAX. A.S.D. DESIGN PRESSURE RATING AND Max. PANEL LENGTH AS PER SCHEDULES SHOWN ON SHEET 10 OF 15 EXCEPT THAT PANEL'S LENGTHS FOR FLOOR/CEILING INSTALLATIONS SHALL BE LIMITED TO 109"
2. FOR NEW WOOD FRAME CONSTRUCTION: WOOD MEMBERS TO BE SOUTHERN PINE No. 2, W/ SPECIFIC DENSITY OF 0.55 OR EQUAL.

WALTER A. TILLIT JR. LICENSE No. 44167 STATE OF FLORIDA PROFESSIONAL ENGINEER

FLORIDA BUILDING CODE (Non High Velocity Hurricane Zone)

©2011 TILTECO, INC.

TILTECO INC.
TILLIT TESTING & ENGINEERING COMPANY
6355 N.W. 36th. St., Ste. 305, VIRGINA GARDENS, FL 33166
Phone : (305)871-1530 . Fax : (305)871-1531
EB-0006719
WALTER A. TILLIT Jr. P.E.
FLORIDA Lic. # 44167

0.040" BERTHA ALUMINUM STORM PANEL (2.25" DEEP)

EASTERN METAL SUPPLY, INC
4268 WEST ROADS DRIVE
WEST PALM BEACH, FL. 33407
PHONE: (561)209-8263, FAX: (561)841-1716

REV. No	DESCRIPTION	DATE	REV. No	DESCRIPTION	DATE
1	OLD 08-145	12/08/11	3		
2			4		

L.G./R.E./A.G.
DRAWN BY:
12/06/11
DATE:
11-224
DRAWING No
SHEET 14 OF 15

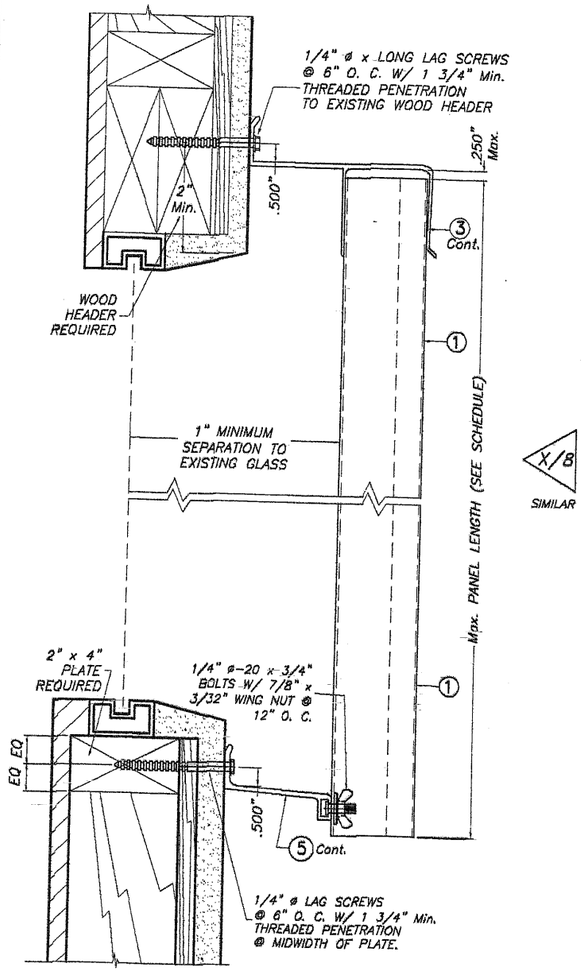

ALTERNATIVE 13A

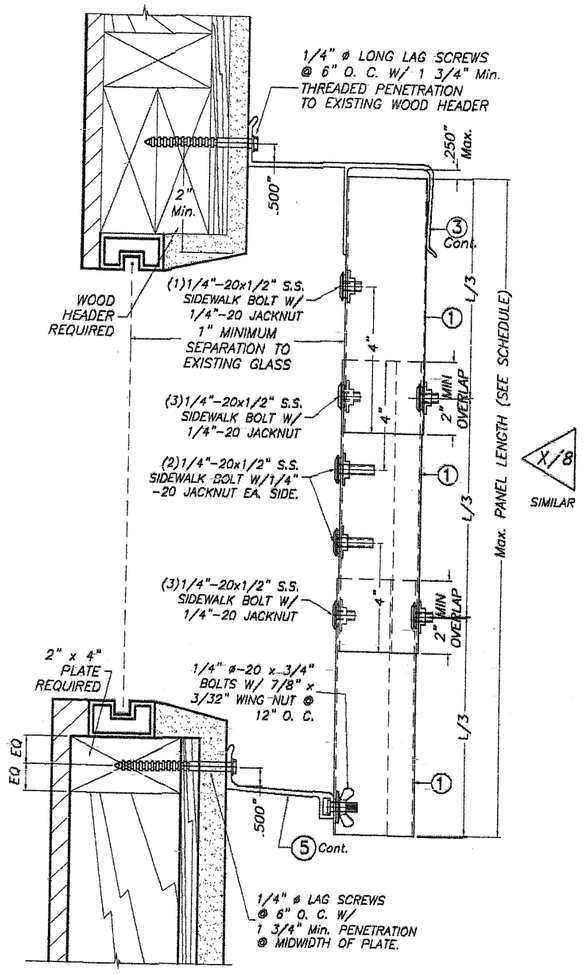

ALTERNATIVE 13B

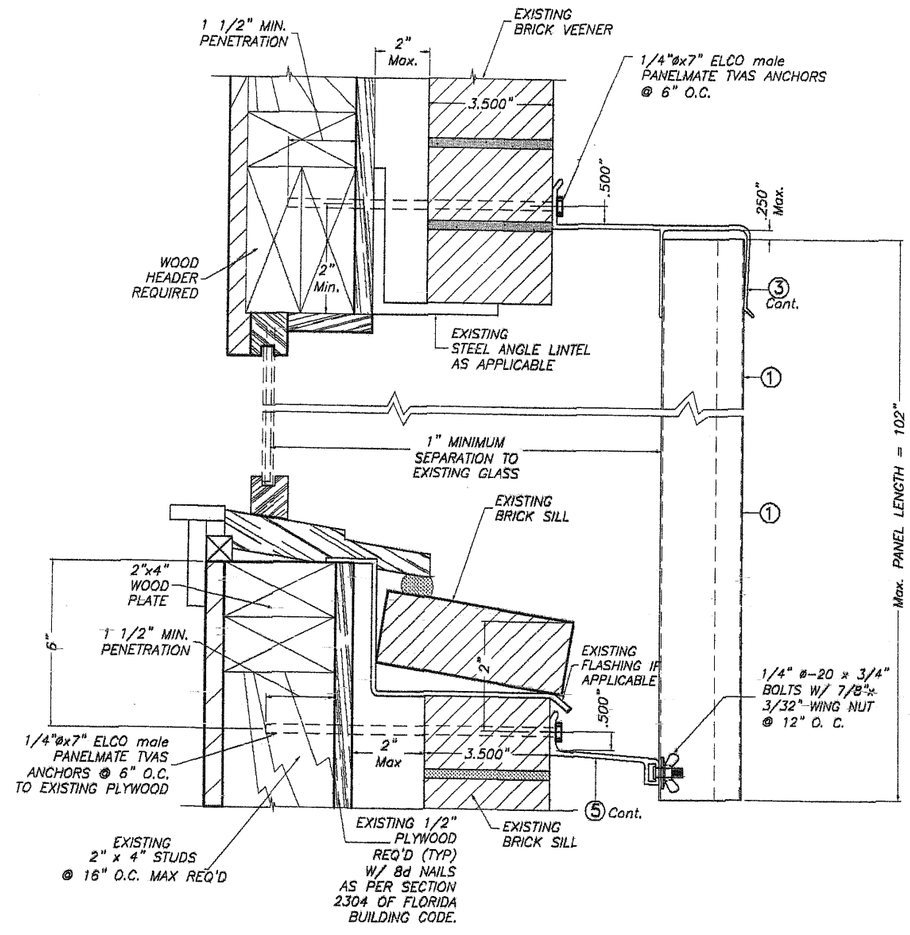

ALTERNATIVE 14

BUILD-OUT INSTALLATION

SCALE : 1/8" = 1"

WALL MOUNTING INSTALLATIONS

SCALE : 1/8" = 1"

NOTE FOR COMBINATION OF SECTIONS:

WALL MOUNTING SECTIONS CAN BE COMBINED IN ANY WAY TO SUIT ANY INSTALLATION.

INSTALLATION DETAILS ON EXISTING WOOD BUILDINGS VALID FOR PANELS (1) USED JOINTLY WITH INTERIORLY REMOVABLE PANELS (1)

NOTES:

1. INSTALLATIONS ARE ONLY VALID FOR MAX. A.S.D. DESIGN PRESSURE RATING AND Max. PANEL LENGTH AS PER SCHEDULES SHOWN ON SHEET 10 OF 15 EXCEPT THAT PANEL'S LENGTHS FOR FLOOR/CEILING INSTALLATIONS SHALL BE LIMITED TO 109"
2. FOR NEW WOOD FRAME CONSTRUCTION: WOOD MEMBERS TO BE SOUTHERN PINE No. 2, W/ SPECIFIC DENSITY OF 0.55 OR EQUAL.

WALTER A. TILLIT JR. LICENSE No. 44167 STATE OF FLORIDA PROFESSIONAL ENGINEER

FLORIDA BUILDING CODE (Non High Velocity Hurricane Zone)

©2011 TILTECO, INC.

TILTECO INC.
TILLIT TESTING & ENGINEERING COMPANY
6355 N.W. 36th. St., Ste. 305, VIRGINIA GARDENS, FL. 33166
Phone : (305)871-1530 . Fax : (305)871-1531
EB-0006719
WALTER A. TILLIT Jr. P.E.
FLORIDA Lic. # 44167

0.040" BERTHA ALUMINUM STORM PANEL (2.25" DEEP)

EASTERN METAL SUPPLY, INC

4268 WEST ROADS DRIVE
WEST PALM BEACH, FL. 33407
PHONE: (561)209-8263, FAX: (561)841-1716

REV. No	DESCRIPTION	DATE	REV. No	DESCRIPTION	DATE
1	OLD 08-145	12/06/11	3		
2			4		

L.G./R.E./A.G.
DRAWN BY:

12/06/11
DATE:

11-224
DRAWING No

SHEET 15 OF 15